TOWN OF NANTUCKET, MASSACHUSETTS

CONTRACT DOCUMENTS
FOR

CHILDREN'S BEACH BOAT RAMP IMPROVEMENT PROJECT
15 HARBOR VIEW WAY
NANTUCKET, MASSACHUSETTS

November 2016

Town of Nantucket

Nantucket Town Hall

16 Broad Street

Nantucket, MA 02554

TABLE OF CONTENTS

	Section Number
Bidding and Contract Requirements	
Invitation to Bid	00020
Instructions to Bidders	00100
Form of General Bid	00300
Agreement	00500
Construction Performance Bond	00610
Construction Payment Bond	00620
General Conditions	C-700
Supplemental Conditions	00800
Excerpts from Applicable State Law	00850
Technical Specifications	
General Requirements	01000
Mobilization and Demobilization	02002
Demolition and Removal	02003
Steel Sheetpile Cofferdam	02110
Scour Protection	02300
Timber Piles	02606
Marine Concrete	03300
Pre-Cast Concrete Planks	03310
Miscellaneous Metals	05000
Heavy Timber Framing	06130

Attachment A – Wage Rates
Attachment B – Regulatory Permit Documents
Order of Conditions- Nantucket Conservation Commission (SE48-2766)
Chapter 91 Waterways License (No. 13987)
U.S. Army Corps of Engineers Permit (NAE-2015-00623)
Attachment C – Subsurface Investigations (General Information Only)
Attachment D – Prior Chapter 91 License No. 10021 (For Reference Only)

SECTION 00020

INVITATION FOR BIDS

Sealed bids for furnishing the following item will be received at the Procurement Office, Nantucket Town Hall, 16 Broad Street, Nantucket, MA 02554 until the time specified below at which time the bids will be publicly opened and read.

Bids will be opened in the Procurement Office on Thursday, December 15, 2016 at 3:00 p.m. Each Bid must be accompanied by a bid security consisting of a BID BOND, CASH, or, CERTIFIED CHECK issued by a responsible bank or trust company in the amount of 5% of the bid price.

A pre-bid meeting will be held at the project site, 15 Harborview Way, Nantucket, MA., at 11:30 a.m. on Monday, November 21, 2016.

The work to be completed for the Children's Beach Boat Ramp Improvement Project shall include but is not limited to the following; Installation of a temporary steel sheetpile cofferdam; installation of a temporary access ramp for launching of boats during construction; removal and stockpiling of existing pre-cast concrete planks, re-grading existing crushed stone base and placing additional crushed stone base material, re-setting of existing and supplemental pre-cast concrete planks; concrete edge fill; installation of stone-filled gabion mattresses scour protection; and timber pier extension and improvements.

A performance bond in an amount equal to 100 percent of the total amount of the contract price with a surety company qualified to do business in the Commonwealth of Massachusetts will be required for the faithful performance of the contract, as well as a labor and materials bond in an amount equal to 100 percent of the total contract price.

All bids for this project are subject to applicable public bidding laws of Massachusetts, including, but not limited to G.L. c.30, §39M.

Attention is directed to the minimum wage rates to be paid as determined by the Commissioner of Labor and Workforce Development and the weekly payroll record submittal requirements under the provisions of Massachusetts General Laws, Chapter 149, Section 26 through 27D inclusive.

Selection of the contractor will be based upon bidder qualifications, including evidence of past performance in similar projects, and bid price. The contract will be awarded to the bidder deemed by the awarding authority to be the lowest responsible and eligible bidder.

The bidder agrees that its bid shall be good and may not be withdrawn for a period of 30 days, Saturdays, Sundays and legal holidays excluded, after the opening of the bids.

The Town reserves the right to waive any informalities, to accept or reject, in whole or in part any or all bids, or take whatever other action may be deemed to be in the best interest of the Town.

Bidders should be aware that many overnight mailing services do not guarantee service to Nantucket.

The bidder should be aware that time is of the essence on this project. In-water, cofferdam work to start on November 1, 2017 with the ramp substantially completed by January 15, 2018. Substantially completed is defined as having the cofferdam removed and all in-water, sediment disturbing work has been completed and the ramp is in usable condition and accepted by The Town. Final completion of non-in-water work to be no later than March 31, 2018.

The Town is bidding this project in advance of the start date to ensure the Contractor will be prepared to commence work on the date the Regulatory Permits' Time-of-Year Restriction Requirement has ended. The Town envisions having the work completed by March 31, 2018.

The Town of Nantucket
By: C. Elizabeth Gibson, Town Manager

SECTION 00100
INSTRUCTIONS TO BIDDERS

1. Receipt and Opening of Bids

The Town of Nantucket, Massachusetts, herein called the Owner, acting by and through its Board of Selectmen, will receive sealed Bids for the project known as the Children's Beach Boat Ramp Improvement Project.

General bids shall be addressed to the Town Manager, Nantucket Town Hall, 16 Broad Street, Nantucket, MA 02554 and endorsed "Bid for Children's Beach Boat Ramp Improvement Project" (Project) will be received at the Office of the Town Manager until 3:00 p.m. prevailing time, on Thursday, December 15, 2016 at which time and place said bids will be publicly opened and read aloud.

Any bid may be withdrawn prior to the above scheduled time for the opening of bids or authorized postponement thereof. Any bid received after the time and date specified will not be considered. The bidder agrees that its bid shall be good and may not be withdrawn for a period of 30 days, Saturdays, Sundays, and legal holidays excluded, after the opening of bids.

2. Location and Work to be Done

The Work consists of furnishing all plant, labor, equipment, hardware and materials for the Children's Beach Boat Improvement Project at the Children's Beach Boat Ramp at 15 Harbor View Way and all work incidental thereto, in accordance with the Specifications and conceptual plans attached hereto.

Additional drawings showing details in accordance with which the Work is to be done may be furnished by addendum from time to time during the bidding period by the Owner or its Architect/Engineer, and shall then become a part of the Contract Documents.

The Contractor shall furnish all labor, services, materials, equipment, plant, machinery, apparatus, appliances, tools, supplies, and all other things necessary to do all work required for the completion of each item of the Work and as herein specified.

The Work to be done and paid for under any item shall not be limited to the exact extent mentioned or described but shall include all incidental work necessary or customarily done for the completion of that item.

3. Preparation of Bid

Each bid must be submitted on the prescribed form. All blank spaces for bid prices must filled in, in ink or typewritten, in both words and figures.

Each bid must be submitted in a sealed envelope bearing on the outside the name of the bidder, his address, and endorsed with the name of the project as specified in Receipt and Opening of Bids, above. If forwarded by mail, the sealed envelope containing the bid must be enclosed in another envelope addressed as specified in Receipt and Opening of Bids, above.

4. Bid Opening Procedure

The following list of requirements shall apply to each filed bid. Bids not meeting all the requirements for timeliness and security will be rejected; bids not meeting signature and addenda requirements will be rejected prior to checking of bid amounts.

Bids shall be filed at the place and before the time specified in Receipt and Opening of Bids, above.

Properly executed bid security shall be placed in a sealed envelope and shall be attached to the outside of the envelope containing the bid.

Bid signatures will be checked.

All addenda will be sent certified mail, with return receipt requested, and/or facsimile or e-mail to all prospective bidders. All bidders shall include with their bids the written acknowledgment form provided in Section 00300, FORM OF GENERAL BID.

The total dollar amount of each bid will be read, and the three apparent lowest bids will be selected for further consideration. These three apparent low bids will be read aloud for the benefit of the other bidders and the bid opening procedure will be closed. All those present at the bid opening may examine all bids after the bid opening and after the reading of the three apparent low bids.

5. Modification

Any bidder may modify his bid by written communication at any time prior to the scheduled closing time for receipt of bids. Any telegraphic communication must be received by the Owner prior to the closing time, and, provided further, the Owner must be satisfied that a written confirmation of the telegraphic modification over the signature of the bidder was mailed prior to the closing time. If written confirmation is not received within two days from the closing time, no consideration will be given to a telegraphic communication.

The communication shall not reveal the bid price but shall provide the addition or subtraction or other modification so that the final prices or terms will not be known by the Owner until the sealed bid is opened.

6. Ability and Experience of Bidder

No award will be made to any bidder who cannot satisfy the Owner that he has sufficient ability and experience in this class of work and sufficient capital and plant to enable him

to prosecute and complete the work successfully within the time named. The Owner's decision or judgment on these matters will be final, conclusive, and binding.

The Owner may make such investigations as it deems necessary, and the bidder shall furnish to the Owner, under oath if so required, all such information and data for this purpose as the Owner may request.

7. Conditions of Work

Each bidder must familiarize himself fully with the conditions and schedule relating to the construction of the project and the employment of labor thereon. Failure to do so will not relieve a successful bidder of his obligation to furnish all material and labor necessary to carry out the provisions of his contract. Insofar as possible the Contractor, in carrying out his work, must employ such methods or means as will not cause any interruption of or interference with the work of any other Contractor.

8. Addenda and Interpretations

No interpretation of the meaning of the plans, specifications or other prebid documents will be made to any bidder orally. All information given to bidders other than by means of the plans, specifications, or by addenda, as described below, is given informally and shall not be used as the basis of a claim against the Owner.

Every request for such interpretation should be in writing addressed to Charles Gibson, Deputy Chief of Police, Nantucket Police Department, 4 Fairgrounds Road, Nantucket, MA 02554 (508-228-1212), cgibson@police.nantucket-ma.gov, and to be given consideration must be received at least seven (7) days prior to the date fixed for the opening of bids. Any and all such interpretations and any supplemental instructions will be in the form of written addenda to the specifications which, when issued, will be mailed by certified mail with return receipt requested to all prospective bidders (at the respective address furnished by them for such purposes), or sent via facsimile or email if time requires. Failure of any bidder to receive any such addendum or interpretation shall not relieve such bidder from any obligation under his bid as submitted. All addenda so issued shall become part of the Contract Documents.

9. Security for Faithful Performance

Simultaneously with his delivery of the executed Contract, the Contractor shall furnish a surety bond or bonds as security for faithful performance of this contract and for the payment of all persons performing labor and materials under this contract. The surety on such bond or bonds shall be a surety company qualified to do business under the laws of the Commonwealth and satisfactory to the Owner. The bonds shall remain in force for one year after final acceptance of the work by the Owner, unless the Owner, in writing, releases the Contractor from the obligation sooner.

10. Power of Attorney

Attorneys-in-fact who sign Contract bonds must file with each bond a certified and effectively dated copy of their power of attorney.

11. Laws and Regulations

The bidder's attention is directed to the fact that all applicable State laws, municipal ordinances or bylaws, and the rules and regulations of all authorities having jurisdiction over construction of the project shall apply to the contract throughout, and they will be deemed to be included in the Contract the same as though written out in full.

12. Liquidated Damages for Failure to Enter into Contract

The successful bidder, upon his failure or refusal to execute and deliver the Contract and bonds required within 10 days after presentation thereof by the Owner, shall forfeit to the Owner, as liquidated damages for such failure or refusal, the security deposited with his/her bid, but the amount forfeited shall not exceed the difference between his/her bid price and the bid price of the next lowest responsible and eligible bidder. In case of death, disability, bona fide clerical or mechanical error of a substantial nature, or other similar unforeseen circumstances affecting the bidder, his/her bid deposit will be returned.

13. Obligation of Bidder

At the time of the opening of bids, each bidder will be presumed to have inspected the site and to have read and to be thoroughly familiar with the Contract Documents (including all addenda). The failure or omission of any bidder to examine any form, instrument, or document shall in no way relieve any bidder from any obligation in respect of his bid.

14. Information Not Guaranteed

All information given in the Contract Documents relating to subsurface and other conditions, natural phenomena, existing pipes, and other structures is from the best sources at present available to the Owner. All such information is furnished only for the information and convenience of bidders and is not guaranteed.

It is agreed and understood that the Owner does not warrant or guarantee that the subsurface or other conditions, natural phenomena, existing pipes, or other structures encountered during construction will be the same as those indicated in the Contract Documents. It is further agreed and understood that no bidder or Contractor shall use or be entitled to use any of the information made available to him or obtained in any examination made by him in any manner as a basis of or ground for any claim or demand against the Owner or the Architect/Engineer, arising from or by reason of any variance which may exist between the information made available and the actual subsurface or other structures actually encountered during the construction work, except as may otherwise be expressly provided for in the Contract Documents.

15. Bid Security

Each bid and sub-bid must be accompanied by bid security in the form of a certified check, a bid bond, cash, or a treasurer's or cashier's check, payable to the Owner, in the

amount of five (5) percent of the value of the bid. Such security of general bidders will be returned to all except the three lowest responsible and eligible bidders within five days, Saturdays, Sundays, and legal holidays excluded, after the opening of bids, and the remaining securities will be returned promptly after the Owner and the accepted bidder have executed the Contract, or if no notice of intent to award has been presented to the selected contractor within 30 days, Saturdays, Sundays and holidays excluded, after the date of the opening of bids, upon demand of the bidder at any time thereafter.

16. Right to Reject Bid

The Owner reserves the right to waive any informalities in bids and to reject any and all bids, should the Owner deem it to be in the public interest to do so.

The Owner may also reject bids which in its sole judgment are either incomplete, conditional, obscure or not responsive or which contain additions not called for, erasures not properly initialed, alterations, or similar irregularities.

17. Time for Completion

The successful general bidder must agree to commence work, be substantially completed with in-water work and to fully complete the project within the time limit stated in Section 00300, FORM OF GENERAL BID.

18. Comparison of Bids

Bids will be compared on the basis of prices set forth in the bid forms. In the event that there is a discrepancy between the lump sum or unit prices written in words and figures, the prices written in words will govern.

19. Award of Contract

The Contract will be awarded to "the lowest responsible and eligible bidder" pursuant to General Laws Chapter 30, Section 39M, as amended. Such a bidder shall possess the skill, ability and integrity necessary for the faithful performance of the work, shall be able to furnish labor that can work in harmony with all other elements of labor employed, or to be employed, in the work, and shall otherwise comply with all applicable provisions of law. Contract award shall be subject to availability of an appropriation for funding and securing of environmental permits.

20. Statutes Regulating Competitive Bidding

Any bid which does not comply with the provisions of Massachusetts General Laws Chapter 30, Section 39M, as amended, need not be accepted and the Owner may reject every such bid.

21. Wage Rates

Prevailing Wage Rates as determined by the Commissioner of Department of Labor and Workforce Development under the provision of the Massachusetts General Laws, Chapter 149, Section 26 to 27G, as amended, apply to this project. It is the responsibility of the bidder, before bid opening, to request any additional information on Prevailing Wage Rates for those tradespeople who may be employed for the proposed work under this contract.

22. Contractor Records

The Contractor shall comply with the provisions of Massachusetts General Laws, Chapter 30, Section 39R concerning Contractor records.

23. Insurance

The Contractor shall carry and continuously maintain until completion of the Contract, insurance as specified in Agreement and in such form as shall protect him performing work covered by this Contract, and the Town of Nantucket and its employees, agents and officials, from all claims an liability for damages for bodily injury, including accidental death, and for property damage, which may arise from operations under this Contract. The Town and Engineer shall be named as an additional insured. The Contractor covenants and agrees to hold the Town and its employees, agents and officials harmless from loss or damage due to claims for bodily injury or death and/or property damage arising from, or in connection with, operations under this Contract.

25. Project Manager

The Owner may utilize the services of a project manager, whose duties shall be as set forth in an Agreement for Project Manager Services.

SECTION 00300

FORM OF GENERAL BID

Bid of _____ (hereinafter called "Bidder")*

(____) a corporation, organized and existing under the laws of the state of _____

(____) a partnership

(____) a joint venture

(____) an individual
doing business as _____

To the Town of Nantucket, Massachusetts (hereinafter called "Owner").

Gentlemen:

A) The undersigned Bidder, in compliance with your invitation for bids for the project known as _____, having examined the plans and specifications and related documents and the site of the proposed work, and being familiar with all of the conditions surrounding the construction of the proposed project including the availability of materials and labor, hereby proposes to furnish all labor, materials, and supplies, and to construct the project in accordance with the contract documents and the plans and specifications within the time set forth below, and at the prices stated below. These prices are to cover all expenses incurred in performing the work required under the contract documents, of which this bid is a part.

The Bidder hereby agrees to commence construction of in-water and cofferdam work on November 1, 2017. The substantial completion of work shall be on or before January 15, 2018, and shall include cofferdam removal and all in-water, sediment disturbing work. The project will be substantially complete when this work has been completed and the ramp is operational and accepted by the Town. Final completion of work to be no later than March 31, 2018.

*Specify corporation, partnership or individual as applicable.

B) Bidder acknowledges receipt of and this bid includes the following addenda:

No. Dated:

No. Dated:

No. Dated:

No. Dated:

C) The Bidder agrees to perform the bid work described in the specifications and shown on the plans for the following contract price:

1. The TOTAL BASE BID PRICE is:

_____Dollars

($_____)

The unit prices for items comprising the contract are further defined as follows:

BID FORM

ITEM NO.	QUANTITY	ITEM OF WORK WITH UNIT PRICE WRITTEN IN WORDS	UNIT PRICE	TOTAL PRICE
02002-1	1 LS	Mobilization and Demobilization at_____ _____ Dollars & Cents/Lump Sum		
02002-2	1 LS	Temporary Access Ramp at_____ _____ Dollars & Cents/Lump Sum		
02003-1	1 LS	Demolition and Removal at_____ _____ Dollars & Cents/Lump Sum		
02110-1	1 LS	Steel Sheetpile Cofferdam at_____ _____ Dollars & Cents/Lump Sum		
02300-1	240 SF	Stone Gabion Scour Protection at_____ _____ Dollars & Cents/Square Foot		
02606-1	2 EA	Timber Piles at_____ _____ Dollars & Cents/Each		
03300-1	6 CY	Concrete Edge Fill at_____ _____ Dollars & Cents/Cubic Yard		

ITEM NO.	QUANTITY	ITEM OF WORK WITH UNIT PRICE WRITTEN IN WORDS	UNIT PRICE	TOTAL PRICE
03310-1	1 LS	Remove & Reset Existing Pre-Cast Concrete Planks at_____ _____ Dollars & Cents/Lump Sum		
03310-2	720 SF	New Pre-Cast Concrete Planks at_____ _____ Dollars & Cents/Square Foot		
03310-3	125 Tons	Crushed Stone Base at_____ _____ Dollars & Cents/Ton		
06130-1	220 BF	Timber Pier Extension at_____ _____ Dollars & Cents/Board Foot		
06130-2	2,600 BF	Timber Pier Fendering at_____ _____ Dollars & Cents/Board Foot		
TOTAL BASE BID PRICE IN WORDS:			TOTAL BASE BID PRICE: $	

The above unit prices shall include all labor, materials, bailing, shoring, removal, overhead, profit, insurance, etc., to cover the finished work of the several kinds called for.

The Bidder understands that all bids for this project are subject to the applicable bidding laws of the Commonwealth of Massachusetts, including General Laws Chapter 149 and Chapter 30, Section 39M, as amended.

The Bidder understands that the Owner reserves the right to reject any or all bids and to waive any informalities in the bidding.

The Bidder agrees that this bid shall be good and may not be withdrawn for a period of 30 days, Saturdays, Sundays and legal holidays excluded, after the opening of bids.

Within 10 days of receipt of the written notice of acceptance of this bid, the Bidder will execute the formal Agreement set forth in Section 00500 AGREEMENT.

Bid security is attached in the sum of five percent (5%) of the total bid in accordance with the conditions of Section 00100 INSTRUCTIONS TO BIDDERS. The bid security may become the property of the Owner in the event the contract and bond are not executed within the time set forth above.

The selected Contractor shall furnish a performance bond and a payment bond in an amount at least equal to one hundred percent (100%) of the contract price in accordance with Section 00610 PERFORMANCE BOND, Section 00620 PAYMENT BOND, and as stipulated in the contract.

The undersigned offers the following information as evidence of his qualifications to perform the work as bid upon according to all the requirements of the plans and specifications.

1. Have been in business under present name for ____ years.

2. The names and addresses of all persons interested in the bid (if made by a partnership or corporation) as principals, are as follows:

_____
_____
_____
_____
_____
_____

(attach supplementary list if necessary)

3. The bidder is requested to state below what work of a similar character to that included in the proposed contract he has done, and give references that will enable the Owner to judge his experience, skill and business standing (add supplementary page if necessary).

Completion Date	Project Name	Contract Amount	Design Engineer	Reference Name	Telephone No.
a.					
b.					
c.					
d.					
e.					
f.					

Bank reference _____
(Name)

_____
(Bank)

_____
(Address)

_____
(Telephone No.)

Pursuant to G.L. c.62C, §49A, I certify hereby in writing, under penalties of perjury, that the within named Bidder/Contractor has complied with all laws of the commonwealth relating to taxes, reporting of employees and contractors, and withholding and remitting of child support.

The undersigned Bidder hereby certifies under penalties of perjury, as follows: (1) that he/she is able to furnish labor that can work in harmony with all other elements of labor employed or to be employed in the work; (2) that all employees to be employed at the worksite will have successfully completed a course in construction safety and health approved by the United States Occupational Safety and Health Administration that is at least 10 hours in duration at the time the employee begins work and who shall furnish documentation of successful completion of said course with the first certified payroll report for each employee; and (3) that all employees to be employed in the work subject to this bid have successfully completed a course in construction safety and health approved by the United States Occupational Safety and Health Administration that is at least 10 hours in duration.

The undersigned certifies under penalties of perjury that this bid is in all respects bona fide, fair and made without collusion or fraud with any other person. As used in this paragraph the word "person" shall mean any natural person, joint venture, partnership, corporation or other business or legal entity.

The undersigned bidder hereby certifies, under pains and penalties of perjury, that the foregoing bid is based upon the payment to laborers to be employed on the project of wages in an amount no less that the applicable prevailing wage rates established for the project by the Massachusetts Department of Labor and Workforce Development. The undersigned bidder agrees to indemnify the awarding authority for, from and against any loss, expense, damages, actions or claims, including any expense incurred in connection with any delay or stoppage of the project work arising out of or as a result of (1) the failure of the said bid to be based upon the payment of the said applicable prevailing wage rates or (2) the failure of the bidder, if selected as the contractor, to pay laborers employed on the project the said applicable prevailing wage rates.

Respectfully submitted:

Date: _____

By: _____
(Signature)

_____
(Type Name of Bidder)

_____
(Title)

_____
(Business Address)

_____
(City and State)

_____
(Telephone Number)

SECTION 00500

AGREEMENT BETWEEN
THE TOWN OF NANTUCKET, MASSACHUSETTS
CONTRACTOR

THIS AGREEMENT made effective _____ , 2016 by and between the TOWN OF NANTUCKET, MASSACHUSETTS a municipal corporation, acting by and through its Town Administration, with offices at 16 Broad Street, Nantucket, Massachusetts 02554 (hereinafter called the "TOWN"), **CONTRACTOR.** and whose principal office address and state of incorporation are as set forth on Attachment 'A' (hereinafter called the "CONTRACTOR").

RECITALS

WHEREAS, the TOWN desires to retain the CONTRACTOR to provide certain services for the TOWN, as described below, and the CONTRACTOR is willing to accept such engagement, all on the terms hereinafter set forth,

NOW, THEREFORE, in consideration of the mutual covenants hereinafter set forth, and other good and valuable consideration, the receipt and sufficiency of which is hereby acknowledged, the parties agree as follows:

ARTICLE 1 - ENGAGEMENT OF THE CONTRACTOR

1.01 The TOWN hereby engages the CONTRACTOR, and the CONTRACTOR hereby accepts the engagement to perform certain services for the TOWN, as described in Article 2.

1.02 In the performance of any service under this Agreement, the CONTRACTOR acts at all times as an independent contractor. There is no relationship of employment or agency between the TOWN, on the one hand, and the CONTRACTOR, on the other, and the TOWN shall not have or exercise any control or direction over the method by which the CONTRACTOR performs its work or functions aside from such control or directions which are consistent with the independent contractor relationship contemplated in the Agreement.

ARTICLE 2 - SERVICES OF THE CONTRACTOR

2.01 The CONTRACTOR will perform the services described in the Scope of Services set forth on Attachment 'A' (the "Work").

2.02 The CONTRACTOR shall report, and be responsible, to the TOWN and its designee as set forth on Attachment 'A'.

DRAFT

2.03 There shall be no amendment to the Scope of Services or Work provided for in this Agreement without the written approval of the TOWN. The TOWN shall be under no obligation to pay for any services performed by the CONTRACTOR which are not explicitly agreed to by the TOWN in writing.

2.04 The CONTRACTOR represents and warrants to the TOWN that the CONTRACTOR (including all of its personnel, whether employees, agents or independent contractors) will be qualified and duly licensed (if necessary) to perform the services required by this Agreement and further agrees to perform its services in a professional manner, and in accordance with the reasonable standard of care implied by law and all applicable local, state or federal ordinances, laws, rules and regulations, all of which are incorporated herein by reference. The CONTRACTOR will obtain and pay for any and all permits, bonds and other items required for the proper and legal performance of the Work.

2.05 The CONTRACTOR represents and warrants to the TOWN that it is not a party to any agreement contract or understanding which would in any way restricts or prohibits it from undertaking or performing its obligations hereunder in accordance with the terms and conditions of this Agreement.

2.06 All written materials and any other documents (whether in the form of "hard" copies, graphics, magnetic media or otherwise) which are received and produced by the CONTRACTOR pursuant to this Agreement shall be deemed to be "work for hire" and shall be and become the property of the TOWN upon the receipt and production of such items by the CONTRACTOR. The TOWN acknowledges that such materials are being prepared with respect to the specific project contemplated hereby and that any reuse of such materials by the TOWN in connection with any other project shall be at the TOWN's sole risk, unless otherwise agreed to by the CONTRACTOR in writing.

2.07 The CONTRACTOR shall be responsible for the professional and technical accuracy, and for the coordination, of all designs, drawings, specifications, estimates and other work or services furnished by CONTRACTOR or its consultants and subcontractors. The CONTRACTOR shall perform its work under this Agreement in such a competent and professional manner that detail checking and reviewing by the TOWN shall not be necessary. The CONTRACTOR shall supervise and direct the Work, using its best skills and attention, which shall not be less than such state of skill and attention generally rendered for projects similar to the subject project in scope, difficulty and location.

2.08 The CONTRACTOR shall not use any subcontractors or sub-consultants (not identified herein) for any work required under this Agreement unless such use has been approved in advance in writing by the TOWN.

2.09 Notwithstanding anything to the contrary in this Agreement, the CONTRACTOR shall not be relieved of its obligations under this Agreement by the TOWN's performance, or failure to perform, any of the TOWN's administrative duties under this Agreement,

DRAFT

including, but not limited to, the TOWN's review and/or approval of plans, estimates, programs, documents, materials, work and services furnished by CONTRACTOR.

ARTICLE 3 - PERIOD OF SERVICES

3.01 The term of this Agreement shall commence on the date hereof and be fully complete by March 31, 2018.

3.02 The CONTRACTOR shall proceed with the Work promptly after receiving Notice to Proceed and will diligently and faithfully prosecute the Work to completion in accordance with the provisions hereof. In any event, the Work shall be completed no later than the date set forth on Attachment 'A'. The CONTRACTOR acknowledges that time is of the essence of this Agreement.

3.03 If the CONTRACTOR is delayed in the performance of any of its obligations under this Agreement by the occurrence of an unforeseen event beyond its control such as fire or other casualty, abnormal adverse weather conditions, acts of God (collectively, "Unavoidable Events") which materially and adversely affect its ability to perform the Work, then the time for the CONTRACTOR to perform the Work shall be extended for such time as the TOWN shall reasonably determine is necessary to permit the CONTRACTOR to perform in light of the effects of the Unavoidable Event.

3.04 If an Unavoidable Event occurs which, in the TOWN's reasonable determination, makes the performance of the Agreement impossible without the expenditure of additional TOWN funds, the TOWN may, at its option, elect to terminate this Agreement upon thirty (30) days written notice.

3.05 The CONTRACTOR agrees not to discriminate against or exclude any person from participation herein on grounds of race, religion, color, sex, age or national origin; and that it shall take affirmative actions to insure that applicants are employed, and that employees are treated during their employment, without regard to race, religion, color, sex, age, handicapped status, or national origin.

3.06 The CONTRACTOR agrees not to participate in or cooperate with an international boycott, as defined in Section 999(b)(3) and (4) of the Internal Revenue Code of 1954, as amended, or engage in conduct declared to be unlawful by Section 2 of Chapter 151E of the Massachusetts General Laws.

ARTICLE 4 - PAYMENTS TO THE CONTRACTOR

4.01 The TOWN agrees to pay the CONTRACTOR in current funds for the performance of the contract, subject to additions and deductions, as provided in Section C-700 GENERAL CONDITIONS of the project documents, and to make payments on account thereof as provided in the Payments to Contractor and Completion Paragraph of Section C-700 GENERAL CONDITIONS.

DRAFT

4.02 That for and in consideration of the payments and agreements hereinafter mentioned, to be made and performed by the TOWN, the CONTRACTOR hereby agrees with the TOWN to commence and complete the project described as follows: hereinafter called the project, for the sum of

_____ Dollars ($_____) and all extra work in connection therewith, under the terms as stated in the Contract Documents; and at his (its or their) own proper cost and expense to furnish all the materials, supplies, machinery equipment, tools, superintendence, labor, insurance, and other accessories and services necessary to complete the said project in accordance with the conditions and prices stated in Section 00300 FORM OF GENERAL BID, Section C-700 GENERAL CONDITIONS, and Section 00800 SUPPLEMENTAL CONDITIONS, the plans, which include all maps, plates, blueprints, and the specifications and Contract Documents as prepared by the TOWN.

4.03 The TOWN will pay the CONTRACTOR for completed satisfactory work upon review and approval of such invoices by the TOWN or its designee.

4.04 This engagement may be subject to budgetary restrictions which may limit the total amount of funds available for the Work. Accordingly, unless otherwise stated on Attachment 'B', the TOWN will not be obligated to pay any amount in excess of the maximum project amount without the express written approval of the TOWN.

4.05 The CONTRACTOR and its sub-contractors shall not be compensated for any services involved in preparing changes that are required for additional work that should have been anticipated by the CONTRACTOR in the preparation of the documents, as reasonably determined by the TOWN.

ARTICLE 5 - TERMINATION

5.01 This Agreement may be terminated, with cause, by either the TOWN or CONTRACTOR, upon written notice given by the non-defaulting party. For the purposes of this provision, "cause" shall include the failure of a party to adhere to the terms of this Agreement or fulfill its material duties hereunder in a timely and proper manner.

5.02 The TOWN shall have the right to terminate this Agreement for its convenience and without cause upon ten (10) days written notice.

5.03 Following termination of this Agreement, the parties shall be relieved of all further obligations hereunder except that:

DRAFT

(a) unless the TOWN terminates for cause under paragraph 5.1, in which event the TOWN shall be under no obligation to make any payments to CONTRACTOR except for those services satisfactorily provided, the TOWN shall remain responsible for payments for the services satisfactorily performed and, unless this Agreement is for a lump-sum, expenses of CONTRACTOR reasonably accrued prior to the effective date of the notice of termination in compliance with this Agreement (less the value of any claims of the TOWN), all as determined by the TOWN in its sole discretion, but for no other amounts, including, without limitation, claims for lost profits on Work not performed; and

(b) The CONTRACTOR shall remain liable for any damages, expenses or liabilities arising under this Agreement (including its indemnity obligations) with respect to WORK performed pursuant to the Agreement.

ARTICLE 6 - INSURANCE

6.01 The CONTRACTOR agrees to indemnify and save the TOWN harmless from any and all manner of suits, claims, or demands arising out of any errors, omissions or negligence by CONTRACTOR (including all its employees, agents and independent contractors) in performing the Work, or any breach of the terms of this Agreement by such CONTRACTOR and shall reimburse the TOWN for any and all costs, damages and expenses, including reasonable attorney's fees, which the TOWN pays or becomes obligated to pay, by reason of such activities, or breach. The provisions of this Section, 6.1, shall be in addition to, and shall not be construed as a limitation on, any other legal rights of the TOWN with respect to the CONTRACTOR, in connection with this Agreement, and shall survive termination or expiration of this Agreement.

6.02 Before commencing Work, the CONTRACTOR shall obtain and maintain at its expense and from insurance companies of an A.M Best rating of A or better, which are licensed to do business in the Commonwealth of Massachusetts, insurance as set forth below. If the CONTRACTOR is permitted to sub-contract a material portion of the Work, or is otherwise identifying a third party to perform services for the Town, the CONTRACTOR shall assure that such sub-contractor or other third party also has such insurance. The CONTRACTOR shall provide:

DRAFT

(a) Workers' Compensation, covering the obligations of the CONTRACTOR in accordance with applicable Workers' Compensation or Benefits laws.

(b) Commercial General Liability Insurance on an occurrence basis with a combined single limit of not less than $1 million. Coverage is to include premises and operations, coverage for liability of subcontractors. The policy shall contain an endorsement stating that the aggregate limits will apply separately to the work being performed under this Agreement.

(c) If vehicles are used in performing the Work, automobile liability insurance of not less than $1 million combined single limit covering owned, hired and non-hired vehicles.

(d) Such additional insurance as may be required by law to be carried by the CONTRACTOR.

(e) Such additional insurance as the TOWN may reasonably require, as set forth on Attachment 'A'.

6.03 CONTRACTOR shall maintain such insurance during the term of Agreement and give the TOWN twenty (20) days written notice of any change or cancellation of coverage. Each insurer providing policies hereunder shall waive its rights to subrogate claims against the TOWN. The TOWN will be added as an additional named insured with respect to each such policy and such endorsement shall be reflected on a Certificate of Insurance to be delivered to the TOWN upon the execution of this Agreement and at such times thereafter as the TOWN may reasonably request.

ARTICLE 7 - WARRANTY

7.01 One (1) year warranty for parts and labor shall be included.

7.02 Any warranty disclaimer for fitness for a particular purpose and warranty of merchantability shall be void.

ARTICLE 8 - GENERAL PROVISIONS

8.01 Upon the expiration or the termination of this Agreement for any reason, all data, drawings, specifications, reports, estimates, summaries and other work product which have been accumulated, developed or prepared by the CONTRACTOR (whether completed or in process) shall become the property of the TOWN upon payment for such to the CONTRACTOR and the CONTRACTOR shall immediately deliver or otherwise make available all such material to the TOWN.

8.02 Neither party may assign, transfer or otherwise dispose of this Agreement or any of its rights hereunder or otherwise delegate any of its duties hereunder without the

DRAFT

prior written consent of the other party, and any such attempted assignment or other disposition without such consent shall be null and void and of no force and effect.

8.03 This Agreement, together with Attachment 'A' (Contractor, Scope of Work, Term), Attachment 'B' (Payments), Attachment 'C' (Tax Compliance Certificate), Attachment 'D' (Certificate of Non-Collusion), and any additional Attachments referred to herein, constitute the entire agreement of TOWN and CONTRACTOR with respect to the matters set forth therein and may not be changed, amended, modified or terms waived except by a writing signed by TOWN and CONTRACTOR. If there is any conflict among the terms set forth in the body of this Agreement and the terms or provisions set forth in the Attachments hereto, or in any other document or law incorporated by reference herein, the terms or provisions contained therein shall be interpreted with the following hierarchy, with the topmost document of the highest priority:

(a) Applicable federal, state and local laws, rules and regulations.

(b) Amendments to this Agreement, if any.

(c) Attachments 'A', 'B', 'C' and, 'D'.

(d) This Agreement.

(e) Any other Attachments to this Agreement.

8.04 To the extent the conflict is not resolved by applying the above hierarchy, the conflict shall be resolved in a manner that results in the highest quantity and best quality of goods and services to the TOWN.

8.05 This Agreement is governed by the laws of The Commonwealth of Massachusetts and shall be construed in accordance therewith. The parties agree that exclusive jurisdiction for any action arising out of or relating to this Agreement shall lie within courts for Nantucket County, Massachusetts and or the U.S. District Court for Massachusetts and the parties hereby irrevocably waive, to the fullest extent permitted by law, any objection which they may now or hereafter have to the venue of any proceeding brought in such location and further irrevocably waive any claims that any such proceeding has been brought in an inconvenient forum.

8.06 Any notices required or allowed shall be to the Contractors address as noted herein or the Towns address above by certified mail, return receipt requested.

8.07 Notwithstanding anything to the contrary in this Agreement, this Agreement is subject to the appropriation and availability of funds.

DRAFT

IN WITNESS WHEREOF, the parties hereto have executed this Agreement the day and year first written above.

FOR THE CONTRACTOR:

FOR THE TOWN:

C. Elizabeth Gibson, Town Manager

_____
Signature

_____
Printed Name Title

DATE: _____

DATE: _____

CONTRACTOR FEDERAL TAX EIN: _____

FUNDING SOURCE ORG/OBJ: _____

As to availability of funds:

_____ _____
Finance Department Date

DRAFT

ATTACHMENT 'A'

A.1 Name of Contractor:

A.2 Contractor Address:

A.3 State of Incorporation:

A.4 Project Scope:

DRAFT

ATTACHMENT 'B'

PAYMENTS

B.1 Maximum Project Amount:

B.2 Payment Increment:

Payments made upon satisfactory completion of the work, compliance with the Contract Documents and submission of invoice with prevailing wage compliance forms.

B.3 Reimbursable Expenses:

None

DRAFT

ATTACHMENT 'C'

TAX COMPLIANCE CERTIFICATION

Pursuant to M.G.L. 62C, Sec.49A, the undersigned certifies under the penalties of perjury that it, to the best knowledge and belief of management, has filed all state tax returns and paid all state taxes required under law (if any, are so required).

CONTRACTOR:

Name
Address
City, State, Zip

_____
Signature

_____ _____
Printed Name Title

_____
Date

Tax ID Number: _____

DRAFT

ATTACHMENT 'D'

CERTIFICATE OF NON-COLLUSION

The undersigned certifies under penalties of perjury that this bid or proposal has been made and submitted in good faith and without collusion or fraud with any person. As used in this certification, the word "person" shall mean any natural person, business, partnership, corporation, union, committee, club, or other organization, entity, or group of individuals.

CONTRACTOR:

Name
Address
City, State, Zip

_____
Signature

_____ _____
Printed Name Title

_____
Date

DRAFT

SECTION 00610

PERFORMANCE BOND

KNOW ALL MEN BY THESE PRESENTS: That we _____
(Name of Contractor)

a _____ hereinafter called "Principal" and
(Corporation, Partnership, Joint Venture or Individual)

_____of _____, State of _____
(Surety) (City & State)

_____ hereinafter called the "Surety" and licensed by the State Division of Insurance to do business under the laws of the Commonwealth of Massachusetts, are held and firmly bound to the City/Town of _____, Massachusetts, hereinafter called "Owner", in the penal sum of _____ Dollars ($_____) in lawful money of the United States, for the payment of which sum well and truly to be made, we bind ourselves, our heirs, executors, administrators and successors, jointly and severally, firmly by these presents.

THE CONDITION OF THIS OBLIGATION is such that Whereas, the Principal entered into a certain contract with the Owner, dated the _____ day of _____, 20___ (the "Construction Contract"), for the construction described as follows: _____ _____.

NOW, THEREFORE, if the Principal shall well, truly and faithfully perform its duties, all the undertakings, covenants, terms, conditions, and agreements of the Construction Contract during the original term thereof, and any extensions thereof which may be granted by the Owner, with or without notice to the Surety, and if he shall satisfy all claims and demands incurred under the Construction Contract, and shall fully indemnify and save harmless the Owner from all costs and damages which it may suffer by reason of failure to do so, and shall reimburse and repay the Owner all outlay and expense which the Owner may incur in making good any default, then this obligation shall be void; otherwise to remain in full force and effect.

PROVIDED, FURTHER, that the Surety's obligation under this Bond shall arise after (1) the Owner has declared the Principal in default of the Construction Contract or any provision thereof or (2) has declared that the Principal has failed, or is otherwise unable or unwilling, to execute the work consistent with, and in conformance to, the Construction Contract (collectively referred to as a "Contractor Default"). The determination of a Contractor Default shall be made solely by the Owner. The Owner need not terminate the Construction Contract to declare a Contractor Default or to invoke its rights under this Bond.

When the Surety's obligation under this Bond arises, the Surety, at its sole expense and at the consent and election of the Owner, shall promptly take one of the following steps: (1) arrange for the Principal to perform and complete the work of the Construction Contract: (2) arrange for a contractor other than the Principal to perform and complete the work of the Construction Contract; (3) reimburse the Owner, in a manner and at such time as the Owner shall decide, for all costs and expenses incurred by the Owner in performing and completing the work of the Construction Contract. Surety will keep Owner reasonably informed of the progress, status and results of any investigation of any claim of the Owner.

If the Surety does not proceed as provided in this Bond with due diligence and all deliberate speed, the Surety shall be deemed to be in default of this Bond, and the Owner shall be entitled to enforce any remedy available to the Owner.

After the Surety's obligation under this Bond arises, the Surety is obligated, to the limit of the amounts of this Bond, for (1) the correction of defective work and completion of the Construction Contract; (2) additional design, professional services, and legal costs, including attorneys' fees, resulting from the Contractor Default or from the default of the Surety under this Bond; (3) any additional work beyond the Construction Contract made necessary by the Contractor Default or default of the Surety under this Bond; (4) indemnification obligation of the Principal, if any, as provided in the Construction Contract; and (5) liquidated damages as provided in the Construction Contract, or if none are so specified, actual and foreseeable consequential damages resulting from the Contractor Default or default of the Surety under this Bond.

Any proceeding, legal or equitable, under this Bond shall be instituted in any court of competent jurisdiction in the Commonwealth of Massachusetts.

The Surety, for value received, hereby stipulates and agrees that no change, extension of time, alteration or addition to the terms of the Construction Contract or to the work to be performed thereunder or the specifications accompanying the same shall in any way affect its obligation on this Bond, and it does hereby waive notice of any such change, extension of time, alteration or addition to the terms of the Construction Contract or to the work or to the specifications.

IN WITNESS WHEREOF, this instrument is executed in _____ ( ) counterparts, each one of which shall be deemed an original, this the _____ day of _____, 20___.

ATTEST:

_____
Principal

_____ By _____
(Principal Secretary)

_____

_____

_____
(Address-Zip Code)

_____ (SEAL)
Witness as to Principal

_____

_____
(Address-Zip Code)

ATTEST:

_____
Surety

_____ By _____
(Attorney-in-Fact)

_____

_____
(Address-Zip Code)

_____ (SEAL)
Witness as to Surety

_____

_____
(Address-Zip Code)

NOTE: Date of Bond must not be prior to date of Contract. If Contractor is a Partnership, all partners should execute Bond.

SECTION 00620

PAYMENT BOND

KNOW ALL MEN BY THESE PRESENTS: That we _____

_____ a_____ _____
(Name of Contractor) (Corporation, Partnership, Joint Venture or Individual)

hereinafter called "Principal" and _____ of _____,
(Surety)

State of _____ hereinafter called the "Surety" and licensed by the State
(City and State)

Division of Insurance to do business under the laws of the Commonwealth of Massachusetts, are held and firmly bound to the City/Town of _____, Massachusetts, hereinafter called "Owner", in the penal sum of _____ Dollars ($_____) in lawful money of the United States, for the payment of which sum well and truly to be made, we bind ourselves, our heirs, executors, administrators and successors, jointly and severally, firmly by these presents.

THE CONDITION OF THIS OBLIGATION is such that Whereas, the Principal entered into a certain contract with the Owner, dated the _____ day of _____, 20___, for the construction described as follows:

NOW, THEREFORE, if the Principal shall promptly make payment to all persons, firms, subcontractors, and corporations furnishing materials for or performing labor in the prosecution of the work provided for in such contract, and any authorized extension or modification thereof, including all amounts due for materials, lubricants, oil, gasoline, coal and coke, repairs on machinery, equipment and tools, consumed or used in connection with the construction of such work, and all insurance premiums on said work, and for all labor, performed in such work whether by subcontractor or otherwise, then this obligation shall be void; otherwise to remain in full force and effect.

PROVIDED, FURTHER, that the said Surety, for value received hereby stipulates and agrees that no change, extension of time, alteration or addition to the terms of the contract or to the work to be performed thereunder or the specifications accompanying the same shall in any way affect its obligation on this bond, and it does hereby waive notice of any such change, extension of time, alteration or addition to the terms of this contract or to the work or to the specifications.

PROVIDED, FURTHER, that no final settlement between the Owner and the Contractor shall abridge the right of any beneficiary hereunder, whose claim may be unsatisfied.

IN WITNESS WHEREOF, this instrument is executed in ____ ( ) counterparts, each one of which shall be deemed an original, this the _____ day of _____, 20__.

ATTEST:

_____
Surety

_____ By _____
(Attorney-in-Fact)

_____

_____
(Address-Zip Code)

_____ (SEAL)
Witness as to Surety

_____

_____
(Address-Zip Code)

NOTE: Date of Bond must not be prior to date of Contract. If Contractor is a Partnership, all partners should execute Bond.

This document has important legal consequences; consultation with an attorney is encouraged with respect to its use or modification. This document should be adapted to the particular circumstances of the contemplated Project and the controlling Laws and Regulations.

STANDARD GENERAL CONDITIONS OF THE CONSTRUCTION CONTRACT

Prepared by

ENGINEERS JOINT CONTRACT DOCUMENTS COMMITTEE

and

Issued and Published Jointly by

AMERICAN COUNCIL OF ENGINEERING COMPANIES

ASSOCIATED GENERAL CONTRACTORS OF AMERICA

AMERICAN SOCIETY OF CIVIL ENGINEERS

PROFESSIONAL ENGINEERS IN PRIVATE PRACTICE
A Practice Division of the
NATIONAL SOCIETY OF PROFESSIONAL ENGINEERS

Endorsed by

CONSTRUCTION SPECIFICATIONS INSTITUTE

Copyright © 2007 National Society of Professional Engineers for EJCDC. All rights reserved.

These General Conditions have been prepared for use with the Suggested Forms of Agreement Between Owner and Contractor (EJCDC C-520 or C-525, 2007 Editions). Their provisions are interrelated and a change in one may necessitate a change in the other. Comments concerning their usage are contained in the Narrative Guide to the EJCDC Construction Documents (EJCDC C-001, 2007 Edition). For guidance in the preparation of Supplementary Conditions, see Guide to the Preparation of Supplementary Conditions (EJCDC C-800, 2007 Edition).

Copyright © 2007 National Society of Professional Engineers
1420 King Street, Alexandria, VA 22314-2794
(703) 684-2882
www.nspe.org

American Council of Engineering Companies
1015 15th Street N.W., Washington, DC 20005
(202) 347-7474
www.acec.org

American Society of Civil Engineers
1801 Alexander Bell Drive, Reston, VA 20191-4400
(800) 548-2723
www.asce.org

Associated General Contractors of America
2300 Wilson Boulevard, Suite 400, Arlington, VA 22201-3308
(703) 548-3118
www.agc.org

The copyright for this EJCDC document is owned jointly by the four
EJCDC sponsoring organizations and held in trust for their benefit by NSPE.

Copyright © 2007 National Society of Professional Engineers for EJCDC. All rights reserved.

STANDARD GENERAL CONDITIONS OF THE CONSTRUCTION CONTRACT

TABLE OF CONTENTS

Page

Article 1 – Definitions and Terminology 1
1.01 Defined Terms 1
1.02 Terminology 5

Article 2 – Preliminary Matters 6
2.01 Delivery of Bonds and Evidence of Insurance 6
2.02 Copies of Documents 6
2.03 Commencement of Contract Times; Notice to Proceed 6
2.04 Starting the Work 7
2.05 Before Starting Construction 7
2.06 Preconstruction Conference; Designation of Authorized Representatives 7
2.07 Initial Acceptance of Schedules 7

Article 3 – Contract Documents: Intent, Amending, Reuse 8
3.01 Intent 8
3.02 Reference Standards 8
3.03 Reporting and Resolving Discrepancies 8
3.04 Amending and Supplementing Contract Documents 9
3.05 Reuse of Documents 10
3.06 Electronic Data 10

Article 4 – Availability of Lands; Subsurface and Physical Conditions; Hazardous Environmental Conditions; Reference Points 10
4.01 Availability of Lands 10
4.02 Subsurface and Physical Conditions 11
4.03 Differing Subsurface or Physical Conditions 11
4.04 Underground Facilities 13
4.05 Reference Points 14
4.06 Hazardous Environmental Condition at Site 14

Article 5 – Bonds and Insurance 16
5.01 Performance, Payment, and Other Bonds 16
5.02 Licensed Sureties and Insurers 16
5.03 Certificates of Insurance 16
5.04 Contractor's Insurance 17
5.05 Owner's Liability Insurance 18
5.06 Property Insurance 18
5.07 Waiver of Rights 20
5.08 Receipt and Application of Insurance Proceeds 21

Copyright © 2007 National Society of Professional Engineers for EJCDC. All rights reserved.

5.09 Acceptance of Bonds and Insurance; Option to Replace 21
5.10 Partial Utilization, Acknowledgment of Property Insurer 21

Article 6 – Contractor's Responsibilities 22
6.01 Supervision and Superintendence 22
6.02 Labor; Working Hours 22
6.03 Services, Materials, and Equipment 22
6.04 Progress Schedule 23
6.05 Substitutes and "Or-Equals" 23
6.06 Concerning Subcontractors, Suppliers, and Others 25
6.07 Patent Fees and Royalties 27
6.08 Permits 27
6.09 Laws and Regulations 27
6.10 Taxes 28
6.11 Use of Site and Other Areas 28
6.12 Record Documents 29
6.13 Safety and Protection 29
6.14 Safety Representative 30
6.15 Hazard Communication Programs 30
6.16 Emergencies 30
6.17 Shop Drawings and Samples 30
6.18 Continuing the Work 32
6.19 Contractor's General Warranty and Guarantee 32
6.20 Indemnification 33
6.21 Delegation of Professional Design Services 34

Article 7 – Other Work at the Site 35
7.01 Related Work at Site 35
7.02 Coordination 35
7.03 Legal Relationships 36

Article 8 – Owner's Responsibilities 36
8.01 Communications to Contractor 36
8.02 Replacement of Engineer 36
8.03 Furnish Data 36
8.04 Pay When Due 36
8.05 Lands and Easements; Reports and Tests 36
8.06 Insurance 36
8.07 Change Orders 36
8.08 Inspections, Tests, and Approvals 37
8.09 Limitations on Owner's Responsibilities 37
8.10 Undisclosed Hazardous Environmental Condition 37
8.11 Evidence of Financial Arrangements 37
8.12 Compliance with Safety Program 37

Article 9 – Engineer's Status During Construction 37
9.01 Owner's Representative 37
9.02 Visits to Site 37

Copyright © 2007 National Society of Professional Engineers for EJCDC. All rights reserved.

9.03 Project Representative 38
9.04 Authorized Variations in Work 38
9.05 Rejecting Defective Work 38
9.06 Shop Drawings, Change Orders and Payments 38
9.07 Determinations for Unit Price Work 39
9.08 Decisions on Requirements of Contract Documents and Acceptability of Work 39
9.09 Limitations on Engineer's Authority and Responsibilities 39
9.10 Compliance with Safety Program 40

Article 10 – Changes in the Work; Claims 40
10.01 Authorized Changes in the Work 40
10.02 Unauthorized Changes in the Work 40
10.03 Execution of Change Orders 41
10.04 Notification to Surety 41
10.05 Claims 41

Article 11 – Cost of the Work; Allowances; Unit Price Work 42
11.01 Cost of the Work 42
11.02 Allowances 45
11.03 Unit Price Work 45

Article 12 – Change of Contract Price; Change of Contract Times 46
12.01 Change of Contract Price 46
12.02 Change of Contract Times 47
12.03 Delays 47

Article 13 – Tests and Inspections; Correction, Removal or Acceptance of Defective Work 48
13.01 Notice of Defects 48
13.02 Access to Work 48
13.03 Tests and Inspections 48
13.04 Uncovering Work 49
13.05 Owner May Stop the Work 50
13.06 Correction or Removal of Defective Work 50
13.07 Correction Period 50
13.08 Acceptance of Defective Work 51
13.09 Owner May Correct Defective Work 51

Article 14 – Payments to Contractor and Completion 52
14.01 Schedule of Values 52
14.02 Progress Payments 52
14.03 Contractor's Warranty of Title 55
14.04 Substantial Completion 55
14.05 Partial Utilization 56
14.06 Final Inspection 56
14.07 Final Payment 57
14.08 Final Completion Delayed 58
14.09 Waiver of Claims 58

Copyright © 2007 National Society of Professional Engineers for EJCDC. All rights reserved.

Article 15 – Suspension of Work and Termination 58
15.01 Owner May Suspend Work 58
15.02 Owner May Terminate for Cause 58
15.03 Owner May Terminate For Convenience 60
15.04 Contractor May Stop Work or Terminate 60

Article 16 – Dispute Resolution 61
16.01 Methods and Procedures 61

Article 17 – Miscellaneous 61
17.01 Giving Notice 61
17.02 Computation of Times 61
17.03 Cumulative Remedies 62
17.04 Survival of Obligations 62
17.05 Controlling Law 62
17.06 Headings 62

Copyright © 2007 National Society of Professional Engineers for EJCDC. All rights reserved.

ARTICLE 1 – DEFINITIONS AND TERMINOLOGY

1.01 *Defined Terms*

A. Wherever used in the Bidding Requirements or Contract Documents and printed with initial capital letters, the terms listed below will have the meanings indicated which are applicable to both the singular and plural thereof. In addition to terms specifically defined, terms with initial capital letters in the Contract Documents include references to identified articles and paragraphs, and the titles of other documents or forms.

1. *Addenda*—Written or graphic instruments issued prior to the opening of Bids which clarify, correct, or change the Bidding Requirements or the proposed Contract Documents.

2. *Agreement*—The written instrument which is evidence of the agreement between Owner and Contractor covering the Work.

3. *Application for Payment*—The form acceptable to Engineer which is to be used by Contractor during the course of the Work in requesting progress or final payments and which is to be accompanied by such supporting documentation as is required by the Contract Documents.

4. *Asbestos*—Any material that contains more than one percent asbestos and is friable or is releasing asbestos fibers into the air above current action levels established by the United States Occupational Safety and Health Administration.

5. *Bid*—The offer or proposal of a Bidder submitted on the prescribed form setting forth the prices for the Work to be performed.

6. *Bidder*—The individual or entity who submits a Bid directly to Owner.

7. *Bidding Documents*—The Bidding Requirements and the proposed Contract Documents (including all Addenda).

8. *Bidding Requirements*—The advertisement or invitation to bid, Instructions to Bidders, Bid security of acceptable form, if any, and the Bid Form with any supplements.

9. *Change Order*—A document recommended by Engineer which is signed by Contractor and Owner and authorizes an addition, deletion, or revision in the Work or an adjustment in the Contract Price or the Contract Times, issued on or after the Effective Date of the Agreement.

10. *Claim*—A demand or assertion by Owner or Contractor seeking an adjustment of Contract Price or Contract Times, or both, or other relief with respect to the terms of the Contract. A demand for money or services by a third party is not a Claim.

11. *Contract*—The entire and integrated written agreement between the Owner and Contractor concerning the Work. The Contract supersedes prior negotiations, representations, or agreements, whether written or oral.

Copyright © 2007 National Society of Professional Engineers for EJCDC. All rights reserved.

12. *Contract Documents*—Those items so designated in the Agreement. Only printed or hard copies of the items listed in the Agreement are Contract Documents. Approved Shop Drawings, other Contractor submittals, and the reports and drawings of subsurface and physical conditions are not Contract Documents.

13. *Contract Price*—The moneys payable by Owner to Contractor for completion of the Work in accordance with the Contract Documents as stated in the Agreement (subject to the provisions of Paragraph 11.03 in the case of Unit Price Work).

14. *Contract Times*—The number of days or the dates stated in the Agreement to: (i) achieve Milestones, if any; (ii) achieve Substantial Completion; and (iii) complete the Work so that it is ready for final payment as evidenced by Engineer's written recommendation of final payment.

15. *Contractor*—The individual or entity with whom Owner has entered into the Agreement.

16. *Cost of the Work*—See Paragraph 11.01 for definition.

17. *Drawings*—That part of the Contract Documents prepared or approved by Engineer which graphically shows the scope, extent, and character of the Work to be performed by Contractor. Shop Drawings and other Contractor submittals are not Drawings as so defined.

18. *Effective Date of the Agreement*—The date indicated in the Agreement on which it becomes effective, but if no such date is indicated, it means the date on which the Agreement is signed and delivered by the last of the two parties to sign and deliver.

19. *Engineer*—The individual or entity named as such in the Agreement.

20. *Field Order*—A written order issued by Engineer which requires minor changes in the Work but which does not involve a change in the Contract Price or the Contract Times.

21. *General Requirements*—Sections of Division 1 of the Specifications.

22. *Hazardous Environmental Condition*—The presence at the Site of Asbestos, PCBs, Petroleum, Hazardous Waste, or Radioactive Material in such quantities or circumstances that may present a substantial danger to persons or property exposed thereto.

23. *Hazardous Waste*—The term Hazardous Waste shall have the meaning provided in Section 1004 of the Solid Waste Disposal Act (42 USC Section 6903) as amended from time to time.

24. *Laws and Regulations; Laws or Regulations*—Any and all applicable laws, rules, regulations, ordinances, codes, and orders of any and all governmental bodies, agencies, authorities, and courts having jurisdiction.

25. *Liens*—Charges, security interests, or encumbrances upon Project funds, real property, or personal property.

26. *Milestone*—A principal event specified in the Contract Documents relating to an intermediate completion date or time prior to Substantial Completion of all the Work.

Copyright © 2007 National Society of Professional Engineers for EJCDC. All rights reserved.

27. *Notice of Award*—The written notice by Owner to the Successful Bidder stating that upon timely compliance by the Successful Bidder with the conditions precedent listed therein, Owner will sign and deliver the Agreement.

28. *Notice to Proceed*—A written notice given by Owner to Contractor fixing the date on which the Contract Times will commence to run and on which Contractor shall start to perform the Work under the Contract Documents.

29. *Owner*—The individual or entity with whom Contractor has entered into the Agreement and for whom the Work is to be performed.

30. *PCBs*—Polychlorinated biphenyls.

31. *Petroleum*—Petroleum, including crude oil or any fraction thereof which is liquid at standard conditions of temperature and pressure (60 degrees Fahrenheit and 14.7 pounds per square inch absolute), such as oil, petroleum, fuel oil, oil sludge, oil refuse, gasoline, kerosene, and oil mixed with other non-Hazardous Waste and crude oils.

32. *Progress Schedule*—A schedule, prepared and maintained by Contractor, describing the sequence and duration of the activities comprising the Contractor's plan to accomplish the Work within the Contract Times.

33. *Project*—The total construction of which the Work to be performed under the Contract Documents may be the whole, or a part.

34. *Project Manual*—The bound documentary information prepared for bidding and constructing the Work. A listing of the contents of the Project Manual, which may be bound in one or more volumes, is contained in the table(s) of contents.

35. *Radioactive Material*—Source, special nuclear, or byproduct material as defined by the Atomic Energy Act of 1954 (42 USC Section 2011 et seq.) as amended from time to time.

36. *Resident Project Representative*—The authorized representative of Engineer who may be assigned to the Site or any part thereof.

37. *Samples*—Physical examples of materials, equipment, or workmanship that are representative of some portion of the Work and which establish the standards by which such portion of the Work will be judged.

38. *Schedule of Submittals*—A schedule, prepared and maintained by Contractor, of required submittals and the time requirements to support scheduled performance of related construction activities.

39. *Schedule of Values*—A schedule, prepared and maintained by Contractor, allocating portions of the Contract Price to various portions of the Work and used as the basis for reviewing Contractor's Applications for Payment.

Copyright © 2007 National Society of Professional Engineers for EJCDC. All rights reserved.

40. *Shop Drawings*—All drawings, diagrams, illustrations, schedules, and other data or information which are specifically prepared or assembled by or for Contractor and submitted by Contractor to illustrate some portion of the Work.

41. *Site*—Lands or areas indicated in the Contract Documents as being furnished by Owner upon which the Work is to be performed, including rights-of-way and easements for access thereto, and such other lands furnished by Owner which are designated for the use of Contractor.

42. *Specifications*—That part of the Contract Documents consisting of written requirements for materials, equipment, systems, standards and workmanship as applied to the Work, and certain administrative requirements and procedural matters applicable thereto.

43. *Subcontractor*—An individual or entity having a direct contract with Contractor or with any other Subcontractor for the performance of a part of the Work at the Site.

44. *Substantial Completion*—The time at which the Work (or a specified part thereof) has progressed to the point where, in the opinion of Engineer, the Work (or a specified part thereof) is sufficiently complete, in accordance with the Contract Documents, so that the Work (or a specified part thereof) can be utilized for the purposes for which it is intended. The terms "substantially complete" and "substantially completed" as applied to all or part of the Work refer to Substantial Completion thereof.

45. *Successful Bidder*—The Bidder submitting a responsive Bid to whom Owner makes an award.

46. *Supplementary Conditions*—That part of the Contract Documents which amends or supplements these General Conditions.

47. *Supplier*—A manufacturer, fabricator, supplier, distributor, materialman, or vendor having a direct contract with Contractor or with any Subcontractor to furnish materials or equipment to be incorporated in the Work by Contractor or Subcontractor.

48. *Underground Facilities*—All underground pipelines, conduits, ducts, cables, wires, manholes, vaults, tanks, tunnels, or other such facilities or attachments, and any encasements containing such facilities, including those that convey electricity, gases, steam, liquid petroleum products, telephone or other communications, cable television, water, wastewater, storm water, other liquids or chemicals, or traffic or other control systems.

49. *Unit Price Work*—Work to be paid for on the basis of unit prices.

50. *Work*—The entire construction or the various separately identifiable parts thereof required to be provided under the Contract Documents. Work includes and is the result of performing or providing all labor, services, and documentation necessary to produce such construction, and furnishing, installing, and incorporating all materials and equipment into such construction, all as required by the Contract Documents.

51. *Work Change Directive*—A written statement to Contractor issued on or after the Effective Date of the Agreement and signed by Owner and recommended by Engineer ordering an

Copyright © 2007 National Society of Professional Engineers for EJCDC. All rights reserved.

addition, deletion, or revision in the Work, or responding to differing or unforeseen subsurface or physical conditions under which the Work is to be performed or to emergencies. A Work Change Directive will not change the Contract Price or the Contract Times but is evidence that the parties expect that the change ordered or documented by a Work Change Directive will be incorporated in a subsequently issued Change Order following negotiations by the parties as to its effect, if any, on the Contract Price or Contract Times.

1.02 *Terminology*

A. The words and terms discussed in Paragraph 1.02.B through F are not defined but, when used in the Bidding Requirements or Contract Documents, have the indicated meaning.

B. *Intent of Certain Terms or Adjectives:*

1. The Contract Documents include the terms "as allowed," "as approved," "as ordered," "as directed" or terms of like effect or import to authorize an exercise of professional judgment by Engineer. In addition, the adjectives "reasonable," "suitable," "acceptable," "proper," "satisfactory," or adjectives of like effect or import are used to describe an action or determination of Engineer as to the Work. It is intended that such exercise of professional judgment, action, or determination will be solely to evaluate, in general, the Work for compliance with the information in the Contract Documents and with the design concept of the Project as a functioning whole as shown or indicated in the Contract Documents (unless there is a specific statement indicating otherwise). The use of any such term or adjective is not intended to and shall not be effective to assign to Engineer any duty or authority to supervise or direct the performance of the Work, or any duty or authority to undertake responsibility contrary to the provisions of Paragraph 9.09 or any other provision of the Contract Documents.

C. *Day:*

1. The word "day" means a calendar day of 24 hours measured from midnight to the next midnight.

D. *Defective:*

1. The word "defective," when modifying the word "Work," refers to Work that is unsatisfactory, faulty, or deficient in that it:

a. does not conform to the Contract Documents; or

b. does not meet the requirements of any applicable inspection, reference standard, test, or approval referred to in the Contract Documents; or

c. has been damaged prior to Engineer's recommendation of final payment (unless responsibility for the protection thereof has been assumed by Owner at Substantial Completion in accordance with Paragraph 14.04 or 14.05).

E. *Furnish, Install, Perform, Provide:*

Copyright © 2007 National Society of Professional Engineers for EJCDC. All rights reserved.

1. The word "furnish," when used in connection with services, materials, or equipment, shall mean to supply and deliver said services, materials, or equipment to the Site (or some other specified location) ready for use or installation and in usable or operable condition.

2. The word "install," when used in connection with services, materials, or equipment, shall mean to put into use or place in final position said services, materials, or equipment complete and ready for intended use.

3. The words "perform" or "provide," when used in connection with services, materials, or equipment, shall mean to furnish and install said services, materials, or equipment complete and ready for intended use.

4. When "furnish," "install," "perform," or "provide" is not used in connection with services, materials, or equipment in a context clearly requiring an obligation of Contractor, "provide" is implied.

F. Unless stated otherwise in the Contract Documents, words or phrases that have a well-known technical or construction industry or trade meaning are used in the Contract Documents in accordance with such recognized meaning.

ARTICLE 2 – PRELIMINARY MATTERS

2.01 *Delivery of Bonds and Evidence of Insurance*

A. When Contractor delivers the executed counterparts of the Agreement to Owner, Contractor shall also deliver to Owner such bonds as Contractor may be required to furnish.

B. *Evidence of Insurance:* Before any Work at the Site is started, Contractor and Owner shall each deliver to the other, with copies to each additional insured identified in the Supplementary Conditions, certificates of insurance (and other evidence of insurance which either of them or any additional insured may reasonably request) which Contractor and Owner respectively are required to purchase and maintain in accordance with Article 5.

2.02 *Copies of Documents*

A. Owner shall furnish to Contractor up to ten printed or hard copies of the Drawings and Project Manual. Additional copies will be furnished upon request at the cost of reproduction.

2.03 *Commencement of Contract Times; Notice to Proceed*

A. The Contract Times will commence to run on the thirtieth day after the Effective Date of the Agreement or, if a Notice to Proceed is given, on the day indicated in the Notice to Proceed. A Notice to Proceed may be given at any time within 30 days after the Effective Date of the Agreement. In no event will the Contract Times commence to run later than the sixtieth day after the day of Bid opening or the thirtieth day after the Effective Date of the Agreement, whichever date is earlier.

Copyright © 2007 National Society of Professional Engineers for EJCDC. All rights reserved.

2.04 *Starting the Work*

A. Contractor shall start to perform the Work on the date when the Contract Times commence to run. No Work shall be done at the Site prior to the date on which the Contract Times commence to run.

2.05 *Before Starting Construction*

A. *Preliminary Schedules:* Within 10 days after the Effective Date of the Agreement (unless otherwise specified in the General Requirements), Contractor shall submit to Engineer for timely review:

1. a preliminary Progress Schedule indicating the times (numbers of days or dates) for starting and completing the various stages of the Work, including any Milestones specified in the Contract Documents;

2. a preliminary Schedule of Submittals; and

3. a preliminary Schedule of Values for all of the Work which includes quantities and prices of items which when added together equal the Contract Price and subdivides the Work into component parts in sufficient detail to serve as the basis for progress payments during performance of the Work. Such prices will include an appropriate amount of overhead and profit applicable to each item of Work.

2.06 *Preconstruction Conference; Designation of Authorized Representatives*

A. Before any Work at the Site is started, a conference attended by Owner, Contractor, Engineer, and others as appropriate will be held to establish a working understanding among the parties as to the Work and to discuss the schedules referred to in Paragraph 2.05.A, procedures for handling Shop Drawings and other submittals, processing Applications for Payment, and maintaining required records.

B. At this conference Owner and Contractor each shall designate, in writing, a specific individual to act as its authorized representative with respect to the services and responsibilities under the Contract. Such individuals shall have the authority to transmit instructions, receive information, render decisions relative to the Contract, and otherwise act on behalf of each respective party.

2.07 *Initial Acceptance of Schedules*

A. At least 10 days before submission of the first Application for Payment a conference attended by Contractor, Engineer, and others as appropriate will be held to review for acceptability to Engineer as provided below the schedules submitted in accordance with Paragraph 2.05.A. Contractor shall have an additional 10 days to make corrections and adjustments and to complete and resubmit the schedules. No progress payment shall be made to Contractor until acceptable schedules are submitted to Engineer.

1. The Progress Schedule will be acceptable to Engineer if it provides an orderly progression of the Work to completion within the Contract Times. Such acceptance will not impose on Engineer responsibility for the Progress Schedule, for sequencing, scheduling, or progress of

Copyright © 2007 National Society of Professional Engineers for EJCDC. All rights reserved.

the Work, nor interfere with or relieve Contractor from Contractor's full responsibility therefor.

2. Contractor's Schedule of Submittals will be acceptable to Engineer if it provides a workable arrangement for reviewing and processing the required submittals.

3. Contractor's Schedule of Values will be acceptable to Engineer as to form and substance if it provides a reasonable allocation of the Contract Price to component parts of the Work.

ARTICLE 3 – CONTRACT DOCUMENTS: INTENT, AMENDING, REUSE

3.01 *Intent*

A. The Contract Documents are complementary; what is required by one is as binding as if required by all.

B. It is the intent of the Contract Documents to describe a functionally complete project (or part thereof) to be constructed in accordance with the Contract Documents. Any labor, documentation, services, materials, or equipment that reasonably may be inferred from the Contract Documents or from prevailing custom or trade usage as being required to produce the indicated result will be provided whether or not specifically called for, at no additional cost to Owner.

C. Clarifications and interpretations of the Contract Documents shall be issued by Engineer as provided in Article 9.

3.02 *Reference Standards*

A. Standards, Specifications, Codes, Laws, and Regulations

1. Reference to standards, specifications, manuals, or codes of any technical society, organization, or association, or to Laws or Regulations, whether such reference be specific or by implication, shall mean the standard, specification, manual, code, or Laws or Regulations in effect at the time of opening of Bids (or on the Effective Date of the Agreement if there were no Bids), except as may be otherwise specifically stated in the Contract Documents.

2. No provision of any such standard, specification, manual, or code, or any instruction of a Supplier, shall be effective to change the duties or responsibilities of Owner, Contractor, or Engineer, or any of their subcontractors, consultants, agents, or employees, from those set forth in the Contract Documents. No such provision or instruction shall be effective to assign to Owner, Engineer, or any of their officers, directors, members, partners, employees, agents, consultants, or subcontractors, any duty or authority to supervise or direct the performance of the Work or any duty or authority to undertake responsibility inconsistent with the provisions of the Contract Documents.

3.03 *Reporting and Resolving Discrepancies*

A. *Reporting Discrepancies:*

Copyright © 2007 National Society of Professional Engineers for EJCDC. All rights reserved.

1. *Contractor's Review of Contract Documents Before Starting Work*: Before undertaking each part of the Work, Contractor shall carefully study and compare the Contract Documents and check and verify pertinent figures therein and all applicable field measurements. Contractor shall promptly report in writing to Engineer any conflict, error, ambiguity, or discrepancy which Contractor discovers, or has actual knowledge of, and shall obtain a written interpretation or clarification from Engineer before proceeding with any Work affected thereby.

2. *Contractor's Review of Contract Documents During Performance of Work*: If, during the performance of the Work, Contractor discovers any conflict, error, ambiguity, or discrepancy within the Contract Documents, or between the Contract Documents and (a) any applicable Law or Regulation , (b) any standard, specification, manual, or code, or (c) any instruction of any Supplier, then Contractor shall promptly report it to Engineer in writing. Contractor shall not proceed with the Work affected thereby (except in an emergency as required by Paragraph 6.16.A) until an amendment or supplement to the Contract Documents has been issued by one of the methods indicated in Paragraph 3.04.

3. Contractor shall not be liable to Owner or Engineer for failure to report any conflict, error, ambiguity, or discrepancy in the Contract Documents unless Contractor had actual knowledge thereof.

B. *Resolving Discrepancies:*

1. Except as may be otherwise specifically stated in the Contract Documents, the provisions of the Contract Documents shall take precedence in resolving any conflict, error, ambiguity, or discrepancy between the provisions of the Contract Documents and:

   a. the provisions of any standard, specification, manual, or code, or the instruction of any Supplier (whether or not specifically incorporated by reference in the Contract Documents); or

   b. the provisions of any Laws or Regulations applicable to the performance of the Work (unless such an interpretation of the provisions of the Contract Documents would result in violation of such Law or Regulation).

3.04 *Amending and Supplementing Contract Documents*

A. The Contract Documents may be amended to provide for additions, deletions, and revisions in the Work or to modify the terms and conditions thereof by either a Change Order or a Work Change Directive.

B. The requirements of the Contract Documents may be supplemented, and minor variations and deviations in the Work may be authorized, by one or more of the following ways:

1. A Field Order;

2. Engineer's approval of a Shop Drawing or Sample (subject to the provisions of Paragraph 6.17.D.3); or

Copyright © 2007 National Society of Professional Engineers for EJCDC. All rights reserved.

3. Engineer's written interpretation or clarification.

3.05 *Reuse of Documents*

A. Contractor and any Subcontractor or Supplier shall not:

1. have or acquire any title to or ownership rights in any of the Drawings, Specifications, or other documents (or copies of any thereof) prepared by or bearing the seal of Engineer or its consultants, including electronic media editions; or

2. reuse any such Drawings, Specifications, other documents, or copies thereof on extensions of the Project or any other project without written consent of Owner and Engineer and specific written verification or adaptation by Engineer.

B. The prohibitions of this Paragraph 3.05 will survive final payment, or termination of the Contract. Nothing herein shall preclude Contractor from retaining copies of the Contract Documents for record purposes.

3.06 *Electronic Data*

A. Unless otherwise stated in the Supplementary Conditions, the data furnished by Owner or Engineer to Contractor, or by Contractor to Owner or Engineer, that may be relied upon are limited to the printed copies (also known as hard copies). Files in electronic media format of text, data, graphics, or other types are furnished only for the convenience of the receiving party. Any conclusion or information obtained or derived from such electronic files will be at the user's sole risk. If there is a discrepancy between the electronic files and the hard copies, the hard copies govern.

B. Because data stored in electronic media format can deteriorate or be modified inadvertently or otherwise without authorization of the data's creator, the party receiving electronic files agrees that it will perform acceptance tests or procedures within 60 days, after which the receiving party shall be deemed to have accepted the data thus transferred. Any errors detected within the 60-day acceptance period will be corrected by the transferring party.

C. When transferring documents in electronic media format, the transferring party makes no representations as to long term compatibility, usability, or readability of documents resulting from the use of software application packages, operating systems, or computer hardware differing from those used by the data's creator.

ARTICLE 4 – AVAILABILITY OF LANDS; SUBSURFACE AND PHYSICAL CONDITIONS; HAZARDOUS ENVIRONMENTAL CONDITIONS; REFERENCE POINTS

4.01 *Availability of Lands*

A. Owner shall furnish the Site. Owner shall notify Contractor of any encumbrances or restrictions not of general application but specifically related to use of the Site with which Contractor must comply in performing the Work. Owner will obtain in a timely manner and pay for easements for permanent structures or permanent changes in existing facilities. If Contractor and Owner are unable to agree on entitlement to or on the amount or extent, if any, of any adjustment in the

Copyright © 2007 National Society of Professional Engineers for EJCDC. All rights reserved.

Contract Price or Contract Times, or both, as a result of any delay in Owner's furnishing the Site or a part thereof, Contractor may make a Claim therefor as provided in Paragraph 10.05.

B. Upon reasonable written request, Owner shall furnish Contractor with a current statement of record legal title and legal description of the lands upon which the Work is to be performed and Owner's interest therein as necessary for giving notice of or filing a mechanic's or construction lien against such lands in accordance with applicable Laws and Regulations.

C. Contractor shall provide for all additional lands and access thereto that may be required for temporary construction facilities or storage of materials and equipment.

4.02 *Subsurface and Physical Conditions*

A. *Reports and Drawings:* The Supplementary Conditions identify:

1. those reports known to Owner of explorations and tests of subsurface conditions at or contiguous to the Site; and

2. those drawings known to Owner of physical conditions relating to existing surface or subsurface structures at the Site (except Underground Facilities).

B. *Limited Reliance by Contractor on Technical Data Authorized:* Contractor may rely upon the accuracy of the "technical data" contained in such reports and drawings, but such reports and drawings are not Contract Documents. Such "technical data" is identified in the Supplementary Conditions. Except for such reliance on such "technical data," Contractor may not rely upon or make any claim against Owner or Engineer, or any of their officers, directors, members, partners, employees, agents, consultants, or subcontractors with respect to:

1. the completeness of such reports and drawings for Contractor's purposes, including, but not limited to, any aspects of the means, methods, techniques, sequences, and procedures of construction to be employed by Contractor, and safety precautions and programs incident thereto; or

2. other data, interpretations, opinions, and information contained in such reports or shown or indicated in such drawings; or

3. any Contractor interpretation of or conclusion drawn from any "technical data" or any such other data, interpretations, opinions, or information.

4.03 *Differing Subsurface or Physical Conditions*

A. *Notice:* If Contractor believes that any subsurface or physical condition that is uncovered or revealed either:

1. is of such a nature as to establish that any "technical data" on which Contractor is entitled to rely as provided in Paragraph 4.02 is materially inaccurate; or

2. is of such a nature as to require a change in the Contract Documents; or

Copyright © 2007 National Society of Professional Engineers for EJCDC. All rights reserved.

3. differs materially from that shown or indicated in the Contract Documents; or

4. is of an unusual nature, and differs materially from conditions ordinarily encountered and generally recognized as inherent in work of the character provided for in the Contract Documents;

then Contractor shall, promptly after becoming aware thereof and before further disturbing the subsurface or physical conditions or performing any Work in connection therewith (except in an emergency as required by Paragraph 6.16.A), notify Owner and Engineer in writing about such condition. Contractor shall not further disturb such condition or perform any Work in connection therewith (except as aforesaid) until receipt of written order to do so.

B. *Engineer's Review*: After receipt of written notice as required by Paragraph 4.03.A, Engineer will promptly review the pertinent condition, determine the necessity of Owner's obtaining additional exploration or tests with respect thereto, and advise Owner in writing (with a copy to Contractor) of Engineer's findings and conclusions.

C. *Possible Price and Times Adjustments:*

1. The Contract Price or the Contract Times, or both, will be equitably adjusted to the extent that the existence of such differing subsurface or physical condition causes an increase or decrease in Contractor's cost of, or time required for, performance of the Work; subject, however, to the following:

   a. such condition must meet any one or more of the categories described in Paragraph 4.03.A; and

   b. with respect to Work that is paid for on a unit price basis, any adjustment in Contract Price will be subject to the provisions of Paragraphs 9.07 and 11.03.

2. Contractor shall not be entitled to any adjustment in the Contract Price or Contract Times if:

   a. Contractor knew of the existence of such conditions at the time Contractor made a final commitment to Owner with respect to Contract Price and Contract Times by the submission of a Bid or becoming bound under a negotiated contract; or

   b. the existence of such condition could reasonably have been discovered or revealed as a result of any examination, investigation, exploration, test, or study of the Site and contiguous areas required by the Bidding Requirements or Contract Documents to be conducted by or for Contractor prior to Contractor's making such final commitment; or

   c. Contractor failed to give the written notice as required by Paragraph 4.03.A.

3. If Owner and Contractor are unable to agree on entitlement to or on the amount or extent, if any, of any adjustment in the Contract Price or Contract Times, or both, a Claim may be made therefor as provided in Paragraph 10.05. However, neither Owner or Engineer, or any of their officers, directors, members, partners, employees, agents, consultants, or subcontractors shall be liable to Contractor for any claims, costs, losses, or damages (including but not limited to all fees and charges of engineers, architects, attorneys, and other

Copyright © 2007 National Society of Professional Engineers for EJCDC. All rights reserved.

professionals and all court or arbitration or other dispute resolution costs) sustained by Contractor on or in connection with any other project or anticipated project.

4.04 *Underground Facilities*

A. *Shown or Indicated:* The information and data shown or indicated in the Contract Documents with respect to existing Underground Facilities at or contiguous to the Site is based on information and data furnished to Owner or Engineer by the owners of such Underground Facilities, including Owner, or by others. Unless it is otherwise expressly provided in the Supplementary Conditions:

1. Owner and Engineer shall not be responsible for the accuracy or completeness of any such information or data provided by others; and

2. the cost of all of the following will be included in the Contract Price, and Contractor shall have full responsibility for:

   a. reviewing and checking all such information and data;

   b. locating all Underground Facilities shown or indicated in the Contract Documents;

   c. coordination of the Work with the owners of such Underground Facilities, including Owner, during construction; and

   d. the safety and protection of all such Underground Facilities and repairing any damage thereto resulting from the Work.

B. *Not Shown or Indicated:*

1. If an Underground Facility is uncovered or revealed at or contiguous to the Site which was not shown or indicated, or not shown or indicated with reasonable accuracy in the Contract Documents, Contractor shall, promptly after becoming aware thereof and before further disturbing conditions affected thereby or performing any Work in connection therewith (except in an emergency as required by Paragraph 6.16.A), identify the owner of such Underground Facility and give written notice to that owner and to Owner and Engineer. Engineer will promptly review the Underground Facility and determine the extent, if any, to which a change is required in the Contract Documents to reflect and document the consequences of the existence or location of the Underground Facility. During such time, Contractor shall be responsible for the safety and protection of such Underground Facility.

2. If Engineer concludes that a change in the Contract Documents is required, a Work Change Directive or a Change Order will be issued to reflect and document such consequences. An equitable adjustment shall be made in the Contract Price or Contract Times, or both, to the extent that they are attributable to the existence or location of any Underground Facility that was not shown or indicated or not shown or indicated with reasonable accuracy in the Contract Documents and that Contractor did not know of and could not reasonably have been expected to be aware of or to have anticipated. If Owner and Contractor are unable to agree on entitlement to or on the amount or extent, if any, of any such adjustment in Contract Price

Copyright © 2007 National Society of Professional Engineers for EJCDC. All rights reserved.

or Contract Times, Owner or Contractor may make a Claim therefor as provided in Paragraph 10.05.

4.05 *Reference Points*

A. Owner shall provide engineering surveys to establish reference points for construction which in Engineer's judgment are necessary to enable Contractor to proceed with the Work. Contractor shall be responsible for laying out the Work, shall protect and preserve the established reference points and property monuments, and shall make no changes or relocations without the prior written approval of Owner. Contractor shall report to Engineer whenever any reference point or property monument is lost or destroyed or requires relocation because of necessary changes in grades or locations, and shall be responsible for the accurate replacement or relocation of such reference points or property monuments by professionally qualified personnel.

4.06 *Hazardous Environmental Condition at Site*

A. *Reports and Drawings:* The Supplementary Conditions identify those reports and drawings known to Owner relating to Hazardous Environmental Conditions that have been identified at the Site.

B. *Limited Reliance by Contractor on Technical Data Authorized:* Contractor may rely upon the accuracy of the "technical data" contained in such reports and drawings, but such reports and drawings are not Contract Documents. Such "technical data" is identified in the Supplementary Conditions. Except for such reliance on such "technical data," Contractor may not rely upon or make any claim against Owner or Engineer, or any of their officers, directors, members, partners, employees, agents, consultants, or subcontractors with respect to:

1. the completeness of such reports and drawings for Contractor's purposes, including, but not limited to, any aspects of the means, methods, techniques, sequences and procedures of construction to be employed by Contractor and safety precautions and programs incident thereto; or

2. other data, interpretations, opinions and information contained in such reports or shown or indicated in such drawings; or

3. any Contractor interpretation of or conclusion drawn from any "technical data" or any such other data, interpretations, opinions or information.

C. Contractor shall not be responsible for any Hazardous Environmental Condition uncovered or revealed at the Site which was not shown or indicated in Drawings or Specifications or identified in the Contract Documents to be within the scope of the Work. Contractor shall be responsible for a Hazardous Environmental Condition created with any materials brought to the Site by Contractor, Subcontractors, Suppliers, or anyone else for whom Contractor is responsible.

D. If Contractor encounters a Hazardous Environmental Condition or if Contractor or anyone for whom Contractor is responsible creates a Hazardous Environmental Condition, Contractor shall immediately: (i) secure or otherwise isolate such condition; (ii) stop all Work in connection with such condition and in any area affected thereby (except in an emergency as required by

Copyright © 2007 National Society of Professional Engineers for EJCDC. All rights reserved.

Paragraph 6.16.A); and (iii) notify Owner and Engineer (and promptly thereafter confirm such notice in writing). Owner shall promptly consult with Engineer concerning the necessity for Owner to retain a qualified expert to evaluate such condition or take corrective action, if any. Promptly after consulting with Engineer, Owner shall take such actions as are necessary to permit Owner to timely obtain required permits and provide Contractor the written notice required by Paragraph 4.06.E.

E. Contractor shall not be required to resume Work in connection with such condition or in any affected area until after Owner has obtained any required permits related thereto and delivered written notice to Contractor: (i) specifying that such condition and any affected area is or has been rendered safe for the resumption of Work; or (ii) specifying any special conditions under which such Work may be resumed safely. If Owner and Contractor cannot agree as to entitlement to or on the amount or extent, if any, of any adjustment in Contract Price or Contract Times, or both, as a result of such Work stoppage or such special conditions under which Work is agreed to be resumed by Contractor, either party may make a Claim therefor as provided in Paragraph 10.05.

F. If after receipt of such written notice Contractor does not agree to resume such Work based on a reasonable belief it is unsafe, or does not agree to resume such Work under such special conditions, then Owner may order the portion of the Work that is in the area affected by such condition to be deleted from the Work. If Owner and Contractor cannot agree as to entitlement to or on the amount or extent, if any, of an adjustment in Contract Price or Contract Times as a result of deleting such portion of the Work, then either party may make a Claim therefor as provided in Paragraph 10.05. Owner may have such deleted portion of the Work performed by Owner's own forces or others in accordance with Article 7.

G. To the fullest extent permitted by Laws and Regulations, Owner shall indemnify and hold harmless Contractor, Subcontractors, and Engineer, and the officers, directors, members, partners, employees, agents, consultants, and subcontractors of each and any of them from and against all claims, costs, losses, and damages (including but not limited to all fees and charges of engineers, architects, attorneys, and other professionals and all court or arbitration or other dispute resolution costs) arising out of or relating to a Hazardous Environmental Condition, provided that such Hazardous Environmental Condition: (i) was not shown or indicated in the Drawings or Specifications or identified in the Contract Documents to be included within the scope of the Work, and (ii) was not created by Contractor or by anyone for whom Contractor is responsible. Nothing in this Paragraph 4.06.G shall obligate Owner to indemnify any individual or entity from and against the consequences of that individual's or entity's own negligence.

H. To the fullest extent permitted by Laws and Regulations, Contractor shall indemnify and hold harmless Owner and Engineer, and the officers, directors, members, partners, employees, agents, consultants, and subcontractors of each and any of them from and against all claims, costs, losses, and damages (including but not limited to all fees and charges of engineers, architects, attorneys, and other professionals and all court or arbitration or other dispute resolution costs) arising out of or relating to a Hazardous Environmental Condition created by Contractor or by anyone for whom Contractor is responsible. Nothing in this Paragraph 4.06.H shall obligate Contractor to indemnify any individual or entity from and against the consequences of that individual's or entity's own negligence.

Copyright © 2007 National Society of Professional Engineers for EJCDC. All rights reserved.

I. The provisions of Paragraphs 4.02, 4.03, and 4.04 do not apply to a Hazardous Environmental Condition uncovered or revealed at the Site.

ARTICLE 5 – BONDS AND INSURANCE

5.01 *Performance, Payment, and Other Bonds*

A. Contractor shall furnish performance and payment bonds, each in an amount at least equal to the Contract Price as security for the faithful performance and payment of all of Contractor's obligations under the Contract Documents. These bonds shall remain in effect until one year after the date when final payment becomes due or until completion of the correction period specified in Paragraph 13.07, whichever is later, except as provided otherwise by Laws or Regulations or by the Contract Documents. Contractor shall also furnish such other bonds as are required by the Contract Documents.

B. All bonds shall be in the form prescribed by the Contract Documents except as provided otherwise by Laws or Regulations, and shall be executed by such sureties as are named in the list of "Companies Holding Certificates of Authority as Acceptable Sureties on Federal Bonds and as Acceptable Reinsuring Companies" as published in Circular 570 (amended) by the Financial Management Service, Surety Bond Branch, U.S. Department of the Treasury. All bonds signed by an agent or attorney-in-fact must be accompanied by a certified copy of that individual's authority to bind the surety. The evidence of authority shall show that it is effective on the date the agent or attorney-in-fact signed each bond.

C. If the surety on any bond furnished by Contractor is declared bankrupt or becomes insolvent or its right to do business is terminated in any state where any part of the Project is located or it ceases to meet the requirements of Paragraph 5.01.B, Contractor shall promptly notify Owner and Engineer and shall, within 20 days after the event giving rise to such notification, provide another bond and surety, both of which shall comply with the requirements of Paragraphs 5.01.B and 5.02.

5.02 *Licensed Sureties and Insurers*

A. All bonds and insurance required by the Contract Documents to be purchased and maintained by Owner or Contractor shall be obtained from surety or insurance companies that are duly licensed or authorized in the jurisdiction in which the Project is located to issue bonds or insurance policies for the limits and coverages so required. Such surety and insurance companies shall also meet such additional requirements and qualifications as may be provided in the Supplementary Conditions.

5.03 *Certificates of Insurance*

A. Contractor shall deliver to Owner, with copies to each additional insured and loss payee identified in the Supplementary Conditions, certificates of insurance (and other evidence of insurance requested by Owner or any other additional insured) which Contractor is required to purchase and maintain.

Copyright © 2007 National Society of Professional Engineers for EJCDC. All rights reserved.

B. Owner shall deliver to Contractor, with copies to each additional insured and loss payee identified in the Supplementary Conditions, certificates of insurance (and other evidence of insurance requested by Contractor or any other additional insured) which Owner is required to purchase and maintain.

C. Failure of Owner to demand such certificates or other evidence of Contractor's full compliance with these insurance requirements or failure of Owner to identify a deficiency in compliance from the evidence provided shall not be construed as a waiver of Contractor's obligation to maintain such insurance.

D. Owner does not represent that insurance coverage and limits established in this Contract necessarily will be adequate to protect Contractor.

E. The insurance and insurance limits required herein shall not be deemed as a limitation on Contractor's liability under the indemnities granted to Owner in the Contract Documents.

5.04 *Contractor's Insurance*

A. Contractor shall purchase and maintain such insurance as is appropriate for the Work being performed and as will provide protection from claims set forth below which may arise out of or result from Contractor's performance of the Work and Contractor's other obligations under the Contract Documents, whether it is to be performed by Contractor, any Subcontractor or Supplier, or by anyone directly or indirectly employed by any of them to perform any of the Work, or by anyone for whose acts any of them may be liable:

1. claims under workers' compensation, disability benefits, and other similar employee benefit acts;

2. claims for damages because of bodily injury, occupational sickness or disease, or death of Contractor's employees;

3. claims for damages because of bodily injury, sickness or disease, or death of any person other than Contractor's employees;

4. claims for damages insured by reasonably available personal injury liability coverage which are sustained:

   a. by any person as a result of an offense directly or indirectly related to the employment of such person by Contractor, or

   b. by any other person for any other reason;

5. claims for damages, other than to the Work itself, because of injury to or destruction of tangible property wherever located, including loss of use resulting therefrom; and

6. claims for damages because of bodily injury or death of any person or property damage arising out of the ownership, maintenance or use of any motor vehicle.

B. The policies of insurance required by this Paragraph 5.04 shall:

Copyright © 2007 National Society of Professional Engineers for EJCDC. All rights reserved.

1. with respect to insurance required by Paragraphs 5.04.A.3 through 5.04.A.6 inclusive, be written on an occurrence basis, include as additional insureds (subject to any customary exclusion regarding professional liability) Owner and Engineer, and any other individuals or entities identified in the Supplementary Conditions, all of whom shall be listed as additional insureds, and include coverage for the respective officers, directors, members, partners, employees, agents, consultants, and subcontractors of each and any of all such additional insureds, and the insurance afforded to these additional insureds shall provide primary coverage for all claims covered thereby;

2. include at least the specific coverages and be written for not less than the limits of liability provided in the Supplementary Conditions or required by Laws or Regulations, whichever is greater;

3. include contractual liability insurance covering Contractor's indemnity obligations under Paragraphs 6.11 and 6.20;

4. contain a provision or endorsement that the coverage afforded will not be canceled, materially changed or renewal refused until at least 30 days prior written notice has been given to Owner and Contractor and to each other additional insured identified in the Supplementary Conditions to whom a certificate of insurance has been issued (and the certificates of insurance furnished by the Contractor pursuant to Paragraph 5.03 will so provide);

5. remain in effect at least until final payment and at all times thereafter when Contractor may be correcting, removing, or replacing defective Work in accordance with Paragraph 13.07; and

6. include completed operations coverage:

    a. Such insurance shall remain in effect for two years after final payment.

    b. Contractor shall furnish Owner and each other additional insured identified in the Supplementary Conditions, to whom a certificate of insurance has been issued, evidence satisfactory to Owner and any such additional insured of continuation of such insurance at final payment and one year thereafter.

5.05 *Owner's Liability Insurance*

A. In addition to the insurance required to be provided by Contractor under Paragraph 5.04, Owner, at Owner's option, may purchase and maintain at Owner's expense Owner's own liability insurance as will protect Owner against claims which may arise from operations under the Contract Documents.

5.06 *Property Insurance*

A. Unless otherwise provided in the Supplementary Conditions, Owner shall purchase and maintain property insurance upon the Work at the Site in the amount of the full replacement cost thereof (subject to such deductible amounts as may be provided in the Supplementary Conditions or required by Laws and Regulations). This insurance shall:

Copyright © 2007 National Society of Professional Engineers for EJCDC. All rights reserved.

1. include the interests of Owner, Contractor, Subcontractors, and Engineer, and any other individuals or entities identified in the Supplementary Conditions, and the officers, directors, members, partners, employees, agents, consultants, and subcontractors of each and any of them, each of whom is deemed to have an insurable interest and shall be listed as a loss payee;

2. be written on a Builder's Risk "all-risk" policy form that shall at least include insurance for physical loss or damage to the Work, temporary buildings, falsework, and materials and equipment in transit, and shall insure against at least the following perils or causes of loss: fire, lightning, extended coverage, theft, vandalism and malicious mischief, earthquake, collapse, debris removal, demolition occasioned by enforcement of Laws and Regulations, water damage (other than that caused by flood), and such other perils or causes of loss as may be specifically required by the Supplementary Conditions.

3. include expenses incurred in the repair or replacement of any insured property (including but not limited to fees and charges of engineers and architects);

4. cover materials and equipment stored at the Site or at another location that was agreed to in writing by Owner prior to being incorporated in the Work, provided that such materials and equipment have been included in an Application for Payment recommended by Engineer;

5. allow for partial utilization of the Work by Owner;

6. include testing and startup; and

7. be maintained in effect until final payment is made unless otherwise agreed to in writing by Owner, Contractor, and Engineer with 30 days written notice to each other loss payee to whom a certificate of insurance has been issued.

B. Owner shall purchase and maintain such equipment breakdown insurance or additional property insurance as may be required by the Supplementary Conditions or Laws and Regulations which will include the interests of Owner, Contractor, Subcontractors, and Engineer, and any other individuals or entities identified in the Supplementary Conditions, and the officers, directors, members, partners, employees, agents, consultants and subcontractors of each and any of them, each of whom is deemed to have an insurable interest and shall be listed as a loss payee.

C. All the policies of insurance (and the certificates or other evidence thereof) required to be purchased and maintained in accordance with this Paragraph 5.06 will contain a provision or endorsement that the coverage afforded will not be canceled or materially changed or renewal refused until at least 30 days prior written notice has been given to Owner and Contractor and to each other loss payee to whom a certificate of insurance has been issued and will contain waiver provisions in accordance with Paragraph 5.07.

D. Owner shall not be responsible for purchasing and maintaining any property insurance specified in this Paragraph 5.06 to protect the interests of Contractor, Subcontractors, or others in the Work to the extent of any deductible amounts that are identified in the Supplementary Conditions. The risk of loss within such identified deductible amount will be borne by Contractor, Subcontractors, or others suffering any such loss, and if any of them wishes property

Copyright © 2007 National Society of Professional Engineers for EJCDC. All rights reserved.

insurance coverage within the limits of such amounts, each may purchase and maintain it at the purchaser's own expense.

E. If Contractor requests in writing that other special insurance be included in the property insurance policies provided under this Paragraph 5.06, Owner shall, if possible, include such insurance, and the cost thereof will be charged to Contractor by appropriate Change Order. Prior to commencement of the Work at the Site, Owner shall in writing advise Contractor whether or not such other insurance has been procured by Owner.

5.07 *Waiver of Rights*

A. Owner and Contractor intend that all policies purchased in accordance with Paragraph 5.06 will protect Owner, Contractor, Subcontractors, and Engineer, and all other individuals or entities identified in the Supplementary Conditions as loss payees (and the officers, directors, members, partners, employees, agents, consultants, and subcontractors of each and any of them) in such policies and will provide primary coverage for all losses and damages caused by the perils or causes of loss covered thereby. All such policies shall contain provisions to the effect that in the event of payment of any loss or damage the insurers will have no rights of recovery against any of the insureds or loss payees thereunder. Owner and Contractor waive all rights against each other and their respective officers, directors, members, partners, employees, agents, consultants and subcontractors of each and any of them for all losses and damages caused by, arising out of or resulting from any of the perils or causes of loss covered by such policies and any other property insurance applicable to the Work; and, in addition, waive all such rights against Subcontractors and Engineer, and all other individuals or entities identified in the Supplementary Conditions as loss payees (and the officers, directors, members, partners, employees, agents, consultants, and subcontractors of each and any of them) under such policies for losses and damages so caused. None of the above waivers shall extend to the rights that any party making such waiver may have to the proceeds of insurance held by Owner as trustee or otherwise payable under any policy so issued.

B. Owner waives all rights against Contractor, Subcontractors, and Engineer, and the officers, directors, members, partners, employees, agents, consultants and subcontractors of each and any of them for:

1. loss due to business interruption, loss of use, or other consequential loss extending beyond direct physical loss or damage to Owner's property or the Work caused by, arising out of, or resulting from fire or other perils whether or not insured by Owner; and

2. loss or damage to the completed Project or part thereof caused by, arising out of, or resulting from fire or other insured peril or cause of loss covered by any property insurance maintained on the completed Project or part thereof by Owner during partial utilization pursuant to Paragraph 14.05, after Substantial Completion pursuant to Paragraph 14.04, or after final payment pursuant to Paragraph 14.07.

C. Any insurance policy maintained by Owner covering any loss, damage or consequential loss referred to in Paragraph 5.07.B shall contain provisions to the effect that in the event of payment of any such loss, damage, or consequential loss, the insurers will have no rights of recovery

Copyright © 2007 National Society of Professional Engineers for EJCDC. All rights reserved.

against Contractor, Subcontractors, or Engineer, and the officers, directors, members, partners, employees, agents, consultants and subcontractors of each and any of them.

5.08 *Receipt and Application of Insurance Proceeds*

A. Any insured loss under the policies of insurance required by Paragraph 5.06 will be adjusted with Owner and made payable to Owner as fiduciary for the loss payees, as their interests may appear, subject to the requirements of any applicable mortgage clause and of Paragraph 5.08.B. Owner shall deposit in a separate account any money so received and shall distribute it in accordance with such agreement as the parties in interest may reach. If no other special agreement is reached, the damaged Work shall be repaired or replaced, the moneys so received applied on account thereof, and the Work and the cost thereof covered by an appropriate Change Order.

B. Owner as fiduciary shall have power to adjust and settle any loss with the insurers unless one of the parties in interest shall object in writing within 15 days after the occurrence of loss to Owner's exercise of this power. If such objection be made, Owner as fiduciary shall make settlement with the insurers in accordance with such agreement as the parties in interest may reach. If no such agreement among the parties in interest is reached, Owner as fiduciary shall adjust and settle the loss with the insurers and, if required in writing by any party in interest, Owner as fiduciary shall give bond for the proper performance of such duties.

5.09 *Acceptance of Bonds and Insurance; Option to Replace*

A. If either Owner or Contractor has any objection to the coverage afforded by or other provisions of the bonds or insurance required to be purchased and maintained by the other party in accordance with Article 5 on the basis of non-conformance with the Contract Documents, the objecting party shall so notify the other party in writing within 10 days after receipt of the certificates (or other evidence requested) required by Paragraph 2.01.B. Owner and Contractor shall each provide to the other such additional information in respect of insurance provided as the other may reasonably request. If either party does not purchase or maintain all of the bonds and insurance required of such party by the Contract Documents, such party shall notify the other party in writing of such failure to purchase prior to the start of the Work, or of such failure to maintain prior to any change in the required coverage. Without prejudice to any other right or remedy, the other party may elect to obtain equivalent bonds or insurance to protect such other party's interests at the expense of the party who was required to provide such coverage, and a Change Order shall be issued to adjust the Contract Price accordingly.

5.10 *Partial Utilization, Acknowledgment of Property Insurer*

A. If Owner finds it necessary to occupy or use a portion or portions of the Work prior to Substantial Completion of all the Work as provided in Paragraph 14.05, no such use or occupancy shall commence before the insurers providing the property insurance pursuant to Paragraph 5.06 have acknowledged notice thereof and in writing effected any changes in coverage necessitated thereby. The insurers providing the property insurance shall consent by endorsement on the policy or policies, but the property insurance shall not be canceled or permitted to lapse on account of any such partial use or occupancy.

Copyright © 2007 National Society of Professional Engineers for EJCDC. All rights reserved.

ARTICLE 6 – CONTRACTOR'S RESPONSIBILITIES

6.01 *Supervision and Superintendence*

A. Contractor shall supervise, inspect, and direct the Work competently and efficiently, devoting such attention thereto and applying such skills and expertise as may be necessary to perform the Work in accordance with the Contract Documents. Contractor shall be solely responsible for the means, methods, techniques, sequences, and procedures of construction. Contractor shall not be responsible for the negligence of Owner or Engineer in the design or specification of a specific means, method, technique, sequence, or procedure of construction which is shown or indicated in and expressly required by the Contract Documents.

B. At all times during the progress of the Work, Contractor shall assign a competent resident superintendent who shall not be replaced without written notice to Owner and Engineer except under extraordinary circumstances.

6.02 *Labor; Working Hours*

A. Contractor shall provide competent, suitably qualified personnel to survey and lay out the Work and perform construction as required by the Contract Documents. Contractor shall at all times maintain good discipline and order at the Site.

B. Except as otherwise required for the safety or protection of persons or the Work or property at the Site or adjacent thereto, and except as otherwise stated in the Contract Documents, all Work at the Site shall be performed during regular working hours. Contractor will not permit the performance of Work on a Saturday, Sunday, or any legal holiday without Owner's written consent (which will not be unreasonably withheld) given after prior written notice to Engineer.

6.03 *Services, Materials, and Equipment*

A. Unless otherwise specified in the Contract Documents, Contractor shall provide and assume full responsibility for all services, materials, equipment, labor, transportation, construction equipment and machinery, tools, appliances, fuel, power, light, heat, telephone, water, sanitary facilities, temporary facilities, and all other facilities and incidentals necessary for the performance, testing, start-up, and completion of the Work.

B. All materials and equipment incorporated into the Work shall be as specified or, if not specified, shall be of good quality and new, except as otherwise provided in the Contract Documents. All special warranties and guarantees required by the Specifications shall expressly run to the benefit of Owner. If required by Engineer, Contractor shall furnish satisfactory evidence (including reports of required tests) as to the source, kind, and quality of materials and equipment.

C. All materials and equipment shall be stored, applied, installed, connected, erected, protected, used, cleaned, and conditioned in accordance with instructions of the applicable Supplier, except as otherwise may be provided in the Contract Documents.

Copyright © 2007 National Society of Professional Engineers for EJCDC. All rights reserved.

6.04 *Progress Schedule*

A. Contractor shall adhere to the Progress Schedule established in accordance with Paragraph 2.07 as it may be adjusted from time to time as provided below.

1. Contractor shall submit to Engineer for acceptance (to the extent indicated in Paragraph 2.07) proposed adjustments in the Progress Schedule that will not result in changing the Contract Times. Such adjustments will comply with any provisions of the General Requirements applicable thereto.

2. Proposed adjustments in the Progress Schedule that will change the Contract Times shall be submitted in accordance with the requirements of Article 12. Adjustments in Contract Times may only be made by a Change Order.

6.05 *Substitutes and "Or-Equals"*

A. Whenever an item of material or equipment is specified or described in the Contract Documents by using the name of a proprietary item or the name of a particular Supplier, the specification or description is intended to establish the type, function, appearance, and quality required. Unless the specification or description contains or is followed by words reading that no like, equivalent, or "or-equal" item or no substitution is permitted, other items of material or equipment or material or equipment of other Suppliers may be submitted to Engineer for review under the circumstances described below.

1. *"Or-Equal" Items:* If in Engineer's sole discretion an item of material or equipment proposed by Contractor is functionally equal to that named and sufficiently similar so that no change in related Work will be required, it may be considered by Engineer as an "or-equal" item, in which case review and approval of the proposed item may, in Engineer's sole discretion, be accomplished without compliance with some or all of the requirements for approval of proposed substitute items. For the purposes of this Paragraph 6.05.A.1, a proposed item of material or equipment will be considered functionally equal to an item so named if:

a. in the exercise of reasonable judgment Engineer determines that:

1) it is at least equal in materials of construction, quality, durability, appearance, strength, and design characteristics;

2) it will reliably perform at least equally well the function and achieve the results imposed by the design concept of the completed Project as a functioning whole; and

3) it has a proven record of performance and availability of responsive service.

b. Contractor certifies that, if approved and incorporated into the Work:

1) there will be no increase in cost to the Owner or increase in Contract Times; and

2) it will conform substantially to the detailed requirements of the item named in the Contract Documents.

Copyright © 2007 National Society of Professional Engineers for EJCDC. All rights reserved.

2. *Substitute Items:*

   a. If in Engineer's sole discretion an item of material or equipment proposed by Contractor does not qualify as an "or-equal" item under Paragraph 6.05.A.1, it will be considered a proposed substitute item.

   b. Contractor shall submit sufficient information as provided below to allow Engineer to determine if the item of material or equipment proposed is essentially equivalent to that named and an acceptable substitute therefor. Requests for review of proposed substitute items of material or equipment will not be accepted by Engineer from anyone other than Contractor.

   c. The requirements for review by Engineer will be as set forth in Paragraph 6.05.A.2.d, as supplemented by the General Requirements, and as Engineer may decide is appropriate under the circumstances.

   d. Contractor shall make written application to Engineer for review of a proposed substitute item of material or equipment that Contractor seeks to furnish or use. The application:

      1) shall certify that the proposed substitute item will:

         a) perform adequately the functions and achieve the results called for by the general design,

         b) be similar in substance to that specified, and

         c) be suited to the same use as that specified;

      2) will state:

         a) the extent, if any, to which the use of the proposed substitute item will prejudice Contractor's achievement of Substantial Completion on time,

         b) whether use of the proposed substitute item in the Work will require a change in any of the Contract Documents (or in the provisions of any other direct contract with Owner for other work on the Project) to adapt the design to the proposed substitute item, and

         c) whether incorporation or use of the proposed substitute item in connection with the Work is subject to payment of any license fee or royalty;

      3) will identify:

         a) all variations of the proposed substitute item from that specified, and

         b) available engineering, sales, maintenance, repair, and replacement services; and

Copyright © 2007 National Society of Professional Engineers for EJCDC. All rights reserved.

4) shall contain an itemized estimate of all costs or credits that will result directly or indirectly from use of such substitute item, including costs of redesign and claims of other contractors affected by any resulting change.

B. *Substitute Construction Methods or Procedures:* If a specific means, method, technique, sequence, or procedure of construction is expressly required by the Contract Documents, Contractor may furnish or utilize a substitute means, method, technique, sequence, or procedure of construction approved by Engineer. Contractor shall submit sufficient information to allow Engineer, in Engineer's sole discretion, to determine that the substitute proposed is equivalent to that expressly called for by the Contract Documents. The requirements for review by Engineer will be similar to those provided in Paragraph 6.05.A.2.

C. *Engineer's Evaluation:* Engineer will be allowed a reasonable time within which to evaluate each proposal or submittal made pursuant to Paragraphs 6.05.A and 6.05.B. Engineer may require Contractor to furnish additional data about the proposed substitute item. Engineer will be the sole judge of acceptability. No "or equal" or substitute will be ordered, installed or utilized until Engineer's review is complete, which will be evidenced by a Change Order in the case of a substitute and an approved Shop Drawing for an "or equal." Engineer will advise Contractor in writing of any negative determination.

D. *Special Guarantee:* Owner may require Contractor to furnish at Contractor's expense a special performance guarantee or other surety with respect to any substitute.

E. *Engineer's Cost Reimbursement*: Engineer will record Engineer's costs in evaluating a substitute proposed or submitted by Contractor pursuant to Paragraphs 6.05.A.2 and 6.05.B. Whether or not Engineer approves a substitute so proposed or submitted by Contractor, Contractor shall reimburse Owner for the reasonable charges of Engineer for evaluating each such proposed substitute. Contractor shall also reimburse Owner for the reasonable charges of Engineer for making changes in the Contract Documents (or in the provisions of any other direct contract with Owner) resulting from the acceptance of each proposed substitute.

F. *Contractor's Expense*: Contractor shall provide all data in support of any proposed substitute or "or-equal" at Contractor's expense.

6.06 *Concerning Subcontractors, Suppliers, and Others*

A. Contractor shall not employ any Subcontractor, Supplier, or other individual or entity (including those acceptable to Owner as indicated in Paragraph 6.06.B), whether initially or as a replacement, against whom Owner may have reasonable objection. Contractor shall not be required to employ any Subcontractor, Supplier, or other individual or entity to furnish or perform any of the Work against whom Contractor has reasonable objection.

B. If the Supplementary Conditions require the identity of certain Subcontractors, Suppliers, or other individuals or entities to be submitted to Owner in advance for acceptance by Owner by a specified date prior to the Effective Date of the Agreement, and if Contractor has submitted a list thereof in accordance with the Supplementary Conditions, Owner's acceptance (either in writing or by failing to make written objection thereto by the date indicated for acceptance or objection in the Bidding Documents or the Contract Documents) of any such Subcontractor, Supplier, or

Copyright © 2007 National Society of Professional Engineers for EJCDC. All rights reserved.

other individual or entity so identified may be revoked on the basis of reasonable objection after due investigation. Contractor shall submit an acceptable replacement for the rejected Subcontractor, Supplier, or other individual or entity, and the Contract Price will be adjusted by the difference in the cost occasioned by such replacement, and an appropriate Change Order will be issued. No acceptance by Owner of any such Subcontractor, Supplier, or other individual or entity, whether initially or as a replacement, shall constitute a waiver of any right of Owner or Engineer to reject defective Work.

C. Contractor shall be fully responsible to Owner and Engineer for all acts and omissions of the Subcontractors, Suppliers, and other individuals or entities performing or furnishing any of the Work just as Contractor is responsible for Contractor's own acts and omissions. Nothing in the Contract Documents:

1. shall create for the benefit of any such Subcontractor, Supplier, or other individual or entity any contractual relationship between Owner or Engineer and any such Subcontractor, Supplier or other individual or entity; nor

2. shall create any obligation on the part of Owner or Engineer to pay or to see to the payment of any moneys due any such Subcontractor, Supplier, or other individual or entity except as may otherwise be required by Laws and Regulations.

D. Contractor shall be solely responsible for scheduling and coordinating the Work of Subcontractors, Suppliers, and other individuals or entities performing or furnishing any of the Work under a direct or indirect contract with Contractor.

E. Contractor shall require all Subcontractors, Suppliers, and such other individuals or entities performing or furnishing any of the Work to communicate with Engineer through Contractor.

F. The divisions and sections of the Specifications and the identifications of any Drawings shall not control Contractor in dividing the Work among Subcontractors or Suppliers or delineating the Work to be performed by any specific trade.

G. All Work performed for Contractor by a Subcontractor or Supplier will be pursuant to an appropriate agreement between Contractor and the Subcontractor or Supplier which specifically binds the Subcontractor or Supplier to the applicable terms and conditions of the Contract Documents for the benefit of Owner and Engineer. Whenever any such agreement is with a Subcontractor or Supplier who is listed as a loss payee on the property insurance provided in Paragraph 5.06, the agreement between the Contractor and the Subcontractor or Supplier will contain provisions whereby the Subcontractor or Supplier waives all rights against Owner, Contractor, Engineer, and all other individuals or entities identified in the Supplementary Conditions to be listed as insureds or loss payees (and the officers, directors, members, partners, employees, agents, consultants, and subcontractors of each and any of them) for all losses and damages caused by, arising out of, relating to, or resulting from any of the perils or causes of loss covered by such policies and any other property insurance applicable to the Work. If the insurers on any such policies require separate waiver forms to be signed by any Subcontractor or Supplier, Contractor will obtain the same.

Copyright © 2007 National Society of Professional Engineers for EJCDC. All rights reserved.

6.07 *Patent Fees and Royalties*

A. Contractor shall pay all license fees and royalties and assume all costs incident to the use in the performance of the Work or the incorporation in the Work of any invention, design, process, product, or device which is the subject of patent rights or copyrights held by others. If a particular invention, design, process, product, or device is specified in the Contract Documents for use in the performance of the Work and if, to the actual knowledge of Owner or Engineer, its use is subject to patent rights or copyrights calling for the payment of any license fee or royalty to others, the existence of such rights shall be disclosed by Owner in the Contract Documents.

B. To the fullest extent permitted by Laws and Regulations, Owner shall indemnify and hold harmless Contractor, and its officers, directors, members, partners, employees, agents, consultants, and subcontractors from and against all claims, costs, losses, and damages (including but not limited to all fees and charges of engineers, architects, attorneys, and other professionals, and all court or arbitration or other dispute resolution costs) arising out of or relating to any infringement of patent rights or copyrights incident to the use in the performance of the Work or resulting from the incorporation in the Work of any invention, design, process, product, or device specified in the Contract Documents, but not identified as being subject to payment of any license fee or royalty to others required by patent rights or copyrights.

C. To the fullest extent permitted by Laws and Regulations, Contractor shall indemnify and hold harmless Owner and Engineer, and the officers, directors, members, partners, employees, agents, consultants and subcontractors of each and any of them from and against all claims, costs, losses, and damages (including but not limited to all fees and charges of engineers, architects, attorneys, and other professionals and all court or arbitration or other dispute resolution costs) arising out of or relating to any infringement of patent rights or copyrights incident to the use in the performance of the Work or resulting from the incorporation in the Work of any invention, design, process, product, or device not specified in the Contract Documents.

6.08 *Permits*

A. Unless otherwise provided in the Supplementary Conditions, Contractor shall obtain and pay for all construction permits and licenses. Owner shall assist Contractor, when necessary, in obtaining such permits and licenses. Contractor shall pay all governmental charges and inspection fees necessary for the prosecution of the Work which are applicable at the time of opening of Bids, or, if there are no Bids, on the Effective Date of the Agreement. Owner shall pay all charges of utility owners for connections for providing permanent service to the Work.

6.09 *Laws and Regulations*

A. Contractor shall give all notices required by and shall comply with all Laws and Regulations applicable to the performance of the Work. Except where otherwise expressly required by applicable Laws and Regulations, neither Owner nor Engineer shall be responsible for monitoring Contractor's compliance with any Laws or Regulations.

B. If Contractor performs any Work knowing or having reason to know that it is contrary to Laws or Regulations, Contractor shall bear all claims, costs, losses, and damages (including but not limited to all fees and charges of engineers, architects, attorneys, and other professionals and all

Copyright © 2007 National Society of Professional Engineers for EJCDC. All rights reserved.

court or arbitration or other dispute resolution costs) arising out of or relating to such Work. However, it shall not be Contractor's responsibility to make certain that the Specifications and Drawings are in accordance with Laws and Regulations, but this shall not relieve Contractor of Contractor's obligations under Paragraph 3.03.

C. Changes in Laws or Regulations not known at the time of opening of Bids (or, on the Effective Date of the Agreement if there were no Bids) having an effect on the cost or time of performance of the Work shall be the subject of an adjustment in Contract Price or Contract Times. If Owner and Contractor are unable to agree on entitlement to or on the amount or extent, if any, of any such adjustment, a Claim may be made therefor as provided in Paragraph 10.05.

6.10 *Taxes*

A. Contractor shall pay all sales, consumer, use, and other similar taxes required to be paid by Contractor in accordance with the Laws and Regulations of the place of the Project which are applicable during the performance of the Work.

6.11 *Use of Site and Other Areas*

A. *Limitation on Use of Site and Other Areas:*

1. Contractor shall confine construction equipment, the storage of materials and equipment, and the operations of workers to the Site and other areas permitted by Laws and Regulations, and shall not unreasonably encumber the Site and other areas with construction equipment or other materials or equipment. Contractor shall assume full responsibility for any damage to any such land or area, or to the owner or occupant thereof, or of any adjacent land or areas resulting from the performance of the Work.

2. Should any claim be made by any such owner or occupant because of the performance of the Work, Contractor shall promptly settle with such other party by negotiation or otherwise resolve the claim by arbitration or other dispute resolution proceeding or at law.

3. To the fullest extent permitted by Laws and Regulations, Contractor shall indemnify and hold harmless Owner and Engineer, and the officers, directors, members, partners, employees, agents, consultants and subcontractors of each and any of them from and against all claims, costs, losses, and damages (including but not limited to all fees and charges of engineers, architects, attorneys, and other professionals and all court or arbitration or other dispute resolution costs) arising out of or relating to any claim or action, legal or equitable, brought by any such owner or occupant against Owner, Engineer, or any other party indemnified hereunder to the extent caused by or based upon Contractor's performance of the Work.

B. *Removal of Debris During Performance of the Work:* During the progress of the Work Contractor shall keep the Site and other areas free from accumulations of waste materials, rubbish, and other debris. Removal and disposal of such waste materials, rubbish, and other debris shall conform to applicable Laws and Regulations.

C. *Cleaning:* Prior to Substantial Completion of the Work Contractor shall clean the Site and the Work and make it ready for utilization by Owner. At the completion of the Work Contractor

Copyright © 2007 National Society of Professional Engineers for EJCDC. All rights reserved.

shall remove from the Site all tools, appliances, construction equipment and machinery, and surplus materials and shall restore to original condition all property not designated for alteration by the Contract Documents.

D. *Loading Structures:* Contractor shall not load nor permit any part of any structure to be loaded in any manner that will endanger the structure, nor shall Contractor subject any part of the Work or adjacent property to stresses or pressures that will endanger it.

6.12 *Record Documents*

A. Contractor shall maintain in a safe place at the Site one record copy of all Drawings, Specifications, Addenda, Change Orders, Work Change Directives, Field Orders, and written interpretations and clarifications in good order and annotated to show changes made during construction. These record documents together with all approved Samples and a counterpart of all approved Shop Drawings will be available to Engineer for reference. Upon completion of the Work, these record documents, Samples, and Shop Drawings will be delivered to Engineer for Owner.

6.13 *Safety and Protection*

A. Contractor shall be solely responsible for initiating, maintaining and supervising all safety precautions and programs in connection with the Work. Such responsibility does not relieve Subcontractors of their responsibility for the safety of persons or property in the performance of their work, nor for compliance with applicable safety Laws and Regulations. Contractor shall take all necessary precautions for the safety of, and shall provide the necessary protection to prevent damage, injury or loss to:

1. all persons on the Site or who may be affected by the Work;

2. all the Work and materials and equipment to be incorporated therein, whether in storage on or off the Site; and

3. other property at the Site or adjacent thereto, including trees, shrubs, lawns, walks, pavements, roadways, structures, utilities, and Underground Facilities not designated for removal, relocation, or replacement in the course of construction.

B. Contractor shall comply with all applicable Laws and Regulations relating to the safety of persons or property, or to the protection of persons or property from damage, injury, or loss; and shall erect and maintain all necessary safeguards for such safety and protection. Contractor shall notify owners of adjacent property and of Underground Facilities and other utility owners when prosecution of the Work may affect them, and shall cooperate with them in the protection, removal, relocation, and replacement of their property.

C. Contractor shall comply with the applicable requirements of Owner's safety programs, if any. The Supplementary Conditions identify any Owner's safety programs that are applicable to the Work.

Copyright © 2007 National Society of Professional Engineers for EJCDC. All rights reserved.

D. Contractor shall inform Owner and Engineer of the specific requirements of Contractor's safety program with which Owner's and Engineer's employees and representatives must comply while at the Site.

E. All damage, injury, or loss to any property referred to in Paragraph 6.13.A.2 or 6.13.A.3 caused, directly or indirectly, in whole or in part, by Contractor, any Subcontractor, Supplier, or any other individual or entity directly or indirectly employed by any of them to perform any of the Work, or anyone for whose acts any of them may be liable, shall be remedied by Contractor (except damage or loss attributable to the fault of Drawings or Specifications or to the acts or omissions of Owner or Engineer or anyone employed by any of them, or anyone for whose acts any of them may be liable, and not attributable, directly or indirectly, in whole or in part, to the fault or negligence of Contractor or any Subcontractor, Supplier, or other individual or entity directly or indirectly employed by any of them).

F. Contractor's duties and responsibilities for safety and for protection of the Work shall continue until such time as all the Work is completed and Engineer has issued a notice to Owner and Contractor in accordance with Paragraph 14.07.B that the Work is acceptable (except as otherwise expressly provided in connection with Substantial Completion).

6.14 *Safety Representative*

A. Contractor shall designate a qualified and experienced safety representative at the Site whose duties and responsibilities shall be the prevention of accidents and the maintaining and supervising of safety precautions and programs.

6.15 *Hazard Communication Programs*

A. Contractor shall be responsible for coordinating any exchange of material safety data sheets or other hazard communication information required to be made available to or exchanged between or among employers at the Site in accordance with Laws or Regulations.

6.16 *Emergencies*

A. In emergencies affecting the safety or protection of persons or the Work or property at the Site or adjacent thereto, Contractor is obligated to act to prevent threatened damage, injury, or loss. Contractor shall give Engineer prompt written notice if Contractor believes that any significant changes in the Work or variations from the Contract Documents have been caused thereby or are required as a result thereof. If Engineer determines that a change in the Contract Documents is required because of the action taken by Contractor in response to such an emergency, a Work Change Directive or Change Order will be issued.

6.17 *Shop Drawings and Samples*

A. Contractor shall submit Shop Drawings and Samples to Engineer for review and approval in accordance with the accepted Schedule of Submittals (as required by Paragraph 2.07). Each submittal will be identified as Engineer may require.

Copyright © 2007 National Society of Professional Engineers for EJCDC. All rights reserved.

1. *Shop Drawings:*

    a. Submit number of copies specified in the General Requirements.

    b. Data shown on the Shop Drawings will be complete with respect to quantities, dimensions, specified performance and design criteria, materials, and similar data to show Engineer the services, materials, and equipment Contractor proposes to provide and to enable Engineer to review the information for the limited purposes required by Paragraph 6.17.D.

2. *Samples:*

    a. Submit number of Samples specified in the Specifications.

    b. Clearly identify each Sample as to material, Supplier, pertinent data such as catalog numbers, the use for which intended and other data as Engineer may require to enable Engineer to review the submittal for the limited purposes required by Paragraph 6.17.D.

B. Where a Shop Drawing or Sample is required by the Contract Documents or the Schedule of Submittals, any related Work performed prior to Engineer's review and approval of the pertinent submittal will be at the sole expense and responsibility of Contractor.

C. *Submittal Procedures:*

1. Before submitting each Shop Drawing or Sample, Contractor shall have:

    a. reviewed and coordinated each Shop Drawing or Sample with other Shop Drawings and Samples and with the requirements of the Work and the Contract Documents;

    b. determined and verified all field measurements, quantities, dimensions, specified performance and design criteria, installation requirements, materials, catalog numbers, and similar information with respect thereto;

    c. determined and verified the suitability of all materials offered with respect to the indicated application, fabrication, shipping, handling, storage, assembly, and installation pertaining to the performance of the Work; and

    d. determined and verified all information relative to Contractor's responsibilities for means, methods, techniques, sequences, and procedures of construction, and safety precautions and programs incident thereto.

2. Each submittal shall bear a stamp or specific written certification that Contractor has satisfied Contractor's obligations under the Contract Documents with respect to Contractor's review and approval of that submittal.

3. With each submittal, Contractor shall give Engineer specific written notice of any variations that the Shop Drawing or Sample may have from the requirements of the Contract Documents. This notice shall be both a written communication separate from the Shop

Copyright © 2007 National Society of Professional Engineers for EJCDC. All rights reserved.

Drawings or Sample submittal; and, in addition, by a specific notation made on each Shop Drawing or Sample submitted to Engineer for review and approval of each such variation.

D. *Engineer's Review:*

1. Engineer will provide timely review of Shop Drawings and Samples in accordance with the Schedule of Submittals acceptable to Engineer. Engineer's review and approval will be only to determine if the items covered by the submittals will, after installation or incorporation in the Work, conform to the information given in the Contract Documents and be compatible with the design concept of the completed Project as a functioning whole as indicated by the Contract Documents.

2. Engineer's review and approval will not extend to means, methods, techniques, sequences, or procedures of construction (except where a particular means, method, technique, sequence, or procedure of construction is specifically and expressly called for by the Contract Documents) or to safety precautions or programs incident thereto. The review and approval of a separate item as such will not indicate approval of the assembly in which the item functions.

3. Engineer's review and approval shall not relieve Contractor from responsibility for any variation from the requirements of the Contract Documents unless Contractor has complied with the requirements of Paragraph 6.17.C.3 and Engineer has given written approval of each such variation by specific written notation thereof incorporated in or accompanying the Shop Drawing or Sample. Engineer's review and approval shall not relieve Contractor from responsibility for complying with the requirements of Paragraph 6.17.C.1.

E. *Resubmittal Procedures:*

1. Contractor shall make corrections required by Engineer and shall return the required number of corrected copies of Shop Drawings and submit, as required, new Samples for review and approval. Contractor shall direct specific attention in writing to revisions other than the corrections called for by Engineer on previous submittals.

6.18 *Continuing the Work*

A. Contractor shall carry on the Work and adhere to the Progress Schedule during all disputes or disagreements with Owner. No Work shall be delayed or postponed pending resolution of any disputes or disagreements, except as permitted by Paragraph 15.04 or as Owner and Contractor may otherwise agree in writing.

6.19 *Contractor's General Warranty and Guarantee*

A. Contractor warrants and guarantees to Owner that all Work will be in accordance with the Contract Documents and will not be defective. Engineer and its officers, directors, members, partners, employees, agents, consultants, and subcontractors shall be entitled to rely on representation of Contractor's warranty and guarantee.

B. Contractor's warranty and guarantee hereunder excludes defects or damage caused by:

Copyright © 2007 National Society of Professional Engineers for EJCDC. All rights reserved.

1. abuse, modification, or improper maintenance or operation by persons other than Contractor, Subcontractors, Suppliers, or any other individual or entity for whom Contractor is responsible; or

2. normal wear and tear under normal usage.

C. Contractor's obligation to perform and complete the Work in accordance with the Contract Documents shall be absolute. None of the following will constitute an acceptance of Work that is not in accordance with the Contract Documents or a release of Contractor's obligation to perform the Work in accordance with the Contract Documents:

1. observations by Engineer;

2. recommendation by Engineer or payment by Owner of any progress or final payment;

3. the issuance of a certificate of Substantial Completion by Engineer or any payment related thereto by Owner;

4. use or occupancy of the Work or any part thereof by Owner;

5. any review and approval of a Shop Drawing or Sample submittal or the issuance of a notice of acceptability by Engineer;

6. any inspection, test, or approval by others; or

7. any correction of defective Work by Owner.

6.20 *Indemnification*

A. To the fullest extent permitted by Laws and Regulations, Contractor shall indemnify and hold harmless Owner and Engineer, and the officers, directors, members, partners, employees, agents, consultants and subcontractors of each and any of them from and against all claims, costs, losses, and damages (including but not limited to all fees and charges of engineers, architects, attorneys, and other professionals and all court or arbitration or other dispute resolution costs) arising out of or relating to the performance of the Work, provided that any such claim, cost, loss, or damage is attributable to bodily injury, sickness, disease, or death, or to injury to or destruction of tangible property (other than the Work itself), including the loss of use resulting therefrom but only to the extent caused by any negligent act or omission of Contractor, any Subcontractor, any Supplier, or any individual or entity directly or indirectly employed by any of them to perform any of the Work or anyone for whose acts any of them may be liable .

B. In any and all claims against Owner or Engineer or any of their officers, directors, members, partners, employees, agents, consultants, or subcontractors by any employee (or the survivor or personal representative of such employee) of Contractor, any Subcontractor, any Supplier, or any individual or entity directly or indirectly employed by any of them to perform any of the Work, or anyone for whose acts any of them may be liable, the indemnification obligation under Paragraph 6.20.A shall not be limited in any way by any limitation on the amount or type of damages, compensation, or benefits payable by or for Contractor or any such Subcontractor,

Copyright © 2007 National Society of Professional Engineers for EJCDC. All rights reserved.

Supplier, or other individual or entity under workers' compensation acts, disability benefit acts, or other employee benefit acts.

C. The indemnification obligations of Contractor under Paragraph 6.20.A shall not extend to the liability of Engineer and Engineer's officers, directors, members, partners, employees, agents, consultants and subcontractors arising out of:

1. the preparation or approval of, or the failure to prepare or approve maps, Drawings, opinions, reports, surveys, Change Orders, designs, or Specifications; or

2. giving directions or instructions, or failing to give them, if that is the primary cause of the injury or damage.

6.21 *Delegation of Professional Design Services*

A. Contractor will not be required to provide professional design services unless such services are specifically required by the Contract Documents for a portion of the Work or unless such services are required to carry out Contractor's responsibilities for construction means, methods, techniques, sequences and procedures. Contractor shall not be required to provide professional services in violation of applicable law.

B. If professional design services or certifications by a design professional related to systems, materials or equipment are specifically required of Contractor by the Contract Documents, Owner and Engineer will specify all performance and design criteria that such services must satisfy. Contractor shall cause such services or certifications to be provided by a properly licensed professional, whose signature and seal shall appear on all drawings, calculations, specifications, certifications, Shop Drawings and other submittals prepared by such professional. Shop Drawings and other submittals related to the Work designed or certified by such professional, if prepared by others, shall bear such professional's written approval when submitted to Engineer.

C. Owner and Engineer shall be entitled to rely upon the adequacy, accuracy and completeness of the services, certifications or approvals performed by such design professionals, provided Owner and Engineer have specified to Contractor all performance and design criteria that such services must satisfy.

D. Pursuant to this Paragraph 6.21, Engineer's review and approval of design calculations and design drawings will be only for the limited purpose of checking for conformance with performance and design criteria given and the design concept expressed in the Contract Documents. Engineer's review and approval of Shop Drawings and other submittals (except design calculations and design drawings) will be only for the purpose stated in Paragraph 6.17.D.1.

E. Contractor shall not be responsible for the adequacy of the performance or design criteria required by the Contract Documents.

Copyright © 2007 National Society of Professional Engineers for EJCDC. All rights reserved.

ARTICLE 7 – OTHER WORK AT THE SITE

7.01 *Related Work at Site*

A. Owner may perform other work related to the Project at the Site with Owner's employees, or through other direct contracts therefor, or have other work performed by utility owners. If such other work is not noted in the Contract Documents, then:

1. written notice thereof will be given to Contractor prior to starting any such other work; and

2. if Owner and Contractor are unable to agree on entitlement to or on the amount or extent, if any, of any adjustment in the Contract Price or Contract Times that should be allowed as a result of such other work, a Claim may be made therefor as provided in Paragraph 10.05.

B. Contractor shall afford each other contractor who is a party to such a direct contract, each utility owner, and Owner, if Owner is performing other work with Owner's employees, proper and safe access to the Site, provide a reasonable opportunity for the introduction and storage of materials and equipment and the execution of such other work, and properly coordinate the Work with theirs. Contractor shall do all cutting, fitting, and patching of the Work that may be required to properly connect or otherwise make its several parts come together and properly integrate with such other work. Contractor shall not endanger any work of others by cutting, excavating, or otherwise altering such work; provided, however, that Contractor may cut or alter others' work with the written consent of Engineer and the others whose work will be affected. The duties and responsibilities of Contractor under this Paragraph are for the benefit of such utility owners and other contractors to the extent that there are comparable provisions for the benefit of Contractor in said direct contracts between Owner and such utility owners and other contractors.

C. If the proper execution or results of any part of Contractor's Work depends upon work performed by others under this Article 7, Contractor shall inspect such other work and promptly report to Engineer in writing any delays, defects, or deficiencies in such other work that render it unavailable or unsuitable for the proper execution and results of Contractor's Work. Contractor's failure to so report will constitute an acceptance of such other work as fit and proper for integration with Contractor's Work except for latent defects and deficiencies in such other work.

7.02 *Coordination*

A. If Owner intends to contract with others for the performance of other work on the Project at the Site, the following will be set forth in Supplementary Conditions:

1. the individual or entity who will have authority and responsibility for coordination of the activities among the various contractors will be identified;

2. the specific matters to be covered by such authority and responsibility will be itemized; and

3. the extent of such authority and responsibilities will be provided.

B. Unless otherwise provided in the Supplementary Conditions, Owner shall have sole authority and responsibility for such coordination.

Copyright © 2007 National Society of Professional Engineers for EJCDC. All rights reserved.

7.03 *Legal Relationships*

A. Paragraphs 7.01.A and 7.02 are not applicable for utilities not under the control of Owner.

B. Each other direct contract of Owner under Paragraph 7.01.A shall provide that the other contractor is liable to Owner and Contractor for the reasonable direct delay and disruption costs incurred by Contractor as a result of the other contractor's wrongful actions or inactions.

C. Contractor shall be liable to Owner and any other contractor under direct contract to Owner for the reasonable direct delay and disruption costs incurred by such other contractor as a result of Contractor's wrongful action or inactions.

ARTICLE 8 – OWNER'S RESPONSIBILITIES

8.01 *Communications to Contractor*

A. Except as otherwise provided in these General Conditions, Owner shall issue all communications to Contractor through Engineer.

8.02 *Replacement of Engineer*

A. In case of termination of the employment of Engineer, Owner shall appoint an engineer to whom Contractor makes no reasonable objection, whose status under the Contract Documents shall be that of the former Engineer.

8.03 *Furnish Data*

A. Owner shall promptly furnish the data required of Owner under the Contract Documents.

8.04 *Pay When Due*

A. Owner shall make payments to Contractor when they are due as provided in Paragraphs 14.02.C and 14.07.C.

8.05 *Lands and Easements; Reports and Tests*

A. Owner's duties with respect to providing lands and easements and providing engineering surveys to establish reference points are set forth in Paragraphs 4.01 and 4.05. Paragraph 4.02 refers to Owner's identifying and making available to Contractor copies of reports of explorations and tests of subsurface conditions and drawings of physical conditions relating to existing surface or subsurface structures at the Site.

8.06 *Insurance*

A. Owner's responsibilities, if any, with respect to purchasing and maintaining liability and property insurance are set forth in Article 5.

8.07 *Change Orders*

A. Owner is obligated to execute Change Orders as indicated in Paragraph 10.03.

Copyright © 2007 National Society of Professional Engineers for EJCDC. All rights reserved.

8.08 *Inspections, Tests, and Approvals*

A. Owner's responsibility with respect to certain inspections, tests, and approvals is set forth in Paragraph 13.03.B.

8.09 *Limitations on Owner's Responsibilities*

A. The Owner shall not supervise, direct, or have control or authority over, nor be responsible for, Contractor's means, methods, techniques, sequences, or procedures of construction, or the safety precautions and programs incident thereto, or for any failure of Contractor to comply with Laws and Regulations applicable to the performance of the Work. Owner will not be responsible for Contractor's failure to perform the Work in accordance with the Contract Documents.

8.10 *Undisclosed Hazardous Environmental Condition*

A. Owner's responsibility in respect to an undisclosed Hazardous Environmental Condition is set forth in Paragraph 4.06.

8.11 *Evidence of Financial Arrangements*

A. Upon request of Contractor, Owner shall furnish Contractor reasonable evidence that financial arrangements have been made to satisfy Owner's obligations under the Contract Documents.

8.12 *Compliance with Safety Program*

A. While at the Site, Owner's employees and representatives shall comply with the specific applicable requirements of Contractor's safety programs of which Owner has been informed pursuant to Paragraph 6.13.D.

ARTICLE 9 – ENGINEER'S STATUS DURING CONSTRUCTION

9.01 *Owner's Representative*

A. Engineer will be Owner's representative during the construction period. The duties and responsibilities and the limitations of authority of Engineer as Owner's representative during construction are set forth in the Contract Documents.

9.02 *Visits to Site*

A. Engineer will make visits to the Site at intervals appropriate to the various stages of construction as Engineer deems necessary in order to observe as an experienced and qualified design professional the progress that has been made and the quality of the various aspects of Contractor's executed Work. Based on information obtained during such visits and observations, Engineer, for the benefit of Owner, will determine, in general, if the Work is proceeding in accordance with the Contract Documents. Engineer will not be required to make exhaustive or continuous inspections on the Site to check the quality or quantity of the Work. Engineer's efforts will be directed toward providing for Owner a greater degree of confidence that the completed Work will conform generally to the Contract Documents. On the basis of such visits

Copyright © 2007 National Society of Professional Engineers for EJCDC. All rights reserved.

and observations, Engineer will keep Owner informed of the progress of the Work and will endeavor to guard Owner against defective Work.

B. Engineer's visits and observations are subject to all the limitations on Engineer's authority and responsibility set forth in Paragraph 9.09. Particularly, but without limitation, during or as a result of Engineer's visits or observations of Contractor's Work, Engineer will not supervise, direct, control, or have authority over or be responsible for Contractor's means, methods, techniques, sequences, or procedures of construction, or the safety precautions and programs incident thereto, or for any failure of Contractor to comply with Laws and Regulations applicable to the performance of the Work.

9.03 *Project Representative*

A. If Owner and Engineer agree, Engineer will furnish a Resident Project Representative to assist Engineer in providing more extensive observation of the Work. The authority and responsibilities of any such Resident Project Representative and assistants will be as provided in the Supplementary Conditions, and limitations on the responsibilities thereof will be as provided in Paragraph 9.09. If Owner designates another representative or agent to represent Owner at the Site who is not Engineer's consultant, agent or employee, the responsibilities and authority and limitations thereon of such other individual or entity will be as provided in the Supplementary Conditions.

9.04 *Authorized Variations in Work*

A. Engineer may authorize minor variations in the Work from the requirements of the Contract Documents which do not involve an adjustment in the Contract Price or the Contract Times and are compatible with the design concept of the completed Project as a functioning whole as indicated by the Contract Documents. These may be accomplished by a Field Order and will be binding on Owner and also on Contractor, who shall perform the Work involved promptly. If Owner or Contractor believes that a Field Order justifies an adjustment in the Contract Price or Contract Times, or both, and the parties are unable to agree on entitlement to or on the amount or extent, if any, of any such adjustment, a Claim may be made therefor as provided in Paragraph 10.05.

9.05 *Rejecting Defective Work*

A. Engineer will have authority to reject Work which Engineer believes to be defective, or that Engineer believes will not produce a completed Project that conforms to the Contract Documents or that will prejudice the integrity of the design concept of the completed Project as a functioning whole as indicated by the Contract Documents. Engineer will also have authority to require special inspection or testing of the Work as provided in Paragraph 13.04, whether or not the Work is fabricated, installed, or completed.

9.06 *Shop Drawings, Change Orders and Payments*

A. In connection with Engineer's authority, and limitations thereof, as to Shop Drawings and Samples, see Paragraph 6.17.

Copyright © 2007 National Society of Professional Engineers for EJCDC. All rights reserved.

B. In connection with Engineer's authority, and limitations thereof, as to design calculations and design drawings submitted in response to a delegation of professional design services, if any, see Paragraph 6.21.

C. In connection with Engineer's authority as to Change Orders, see Articles 10, 11, and 12.

D. In connection with Engineer's authority as to Applications for Payment, see Article 14.

9.07 *Determinations for Unit Price Work*

A. Engineer will determine the actual quantities and classifications of Unit Price Work performed by Contractor. Engineer will review with Contractor the Engineer's preliminary determinations on such matters before rendering a written decision thereon (by recommendation of an Application for Payment or otherwise). Engineer's written decision thereon will be final and binding (except as modified by Engineer to reflect changed factual conditions or more accurate data) upon Owner and Contractor, subject to the provisions of Paragraph 10.05.

9.08 *Decisions on Requirements of Contract Documents and Acceptability of Work*

A. Engineer will be the initial interpreter of the requirements of the Contract Documents and judge of the acceptability of the Work thereunder. All matters in question and other matters between Owner and Contractor arising prior to the date final payment is due relating to the acceptability of the Work, and the interpretation of the requirements of the Contract Documents pertaining to the performance of the Work, will be referred initially to Engineer in writing within 30 days of the event giving rise to the question.

B. Engineer will, with reasonable promptness, render a written decision on the issue referred. If Owner or Contractor believes that any such decision entitles them to an adjustment in the Contract Price or Contract Times or both, a Claim may be made under Paragraph 10.05. The date of Engineer's decision shall be the date of the event giving rise to the issues referenced for the purposes of Paragraph 10.05.B.

C. Engineer's written decision on the issue referred will be final and binding on Owner and Contractor, subject to the provisions of Paragraph 10.05.

D. When functioning as interpreter and judge under this Paragraph 9.08, Engineer will not show partiality to Owner or Contractor and will not be liable in connection with any interpretation or decision rendered in good faith in such capacity.

9.09 *Limitations on Engineer's Authority and Responsibilities*

A. Neither Engineer's authority or responsibility under this Article 9 or under any other provision of the Contract Documents nor any decision made by Engineer in good faith either to exercise or not exercise such authority or responsibility or the undertaking, exercise, or performance of any authority or responsibility by Engineer shall create, impose, or give rise to any duty in contract, tort, or otherwise owed by Engineer to Contractor, any Subcontractor, any Supplier, any other individual or entity, or to any surety for or employee or agent of any of them.

Copyright © 2007 National Society of Professional Engineers for EJCDC. All rights reserved.

B. Engineer will not supervise, direct, control, or have authority over or be responsible for Contractor's means, methods, techniques, sequences, or procedures of construction, or the safety precautions and programs incident thereto, or for any failure of Contractor to comply with Laws and Regulations applicable to the performance of the Work. Engineer will not be responsible for Contractor's failure to perform the Work in accordance with the Contract Documents.

C. Engineer will not be responsible for the acts or omissions of Contractor or of any Subcontractor, any Supplier, or of any other individual or entity performing any of the Work.

D. Engineer's review of the final Application for Payment and accompanying documentation and all maintenance and operating instructions, schedules, guarantees, bonds, certificates of inspection, tests and approvals, and other documentation required to be delivered by Paragraph 14.07.A will only be to determine generally that their content complies with the requirements of, and in the case of certificates of inspections, tests, and approvals that the results certified indicate compliance with, the Contract Documents.

E. The limitations upon authority and responsibility set forth in this Paragraph 9.09 shall also apply to the Resident Project Representative, if any, and assistants, if any.

9.10 *Compliance with Safety Program*

A. While at the Site, Engineer's employees and representatives shall comply with the specific applicable requirements of Contractor's safety programs of which Engineer has been informed pursuant to Paragraph 6.13.D.

ARTICLE 10 – CHANGES IN THE WORK; CLAIMS

10.01 *Authorized Changes in the Work*

A. Without invalidating the Contract and without notice to any surety, Owner may, at any time or from time to time, order additions, deletions, or revisions in the Work by a Change Order, or a Work Change Directive. Upon receipt of any such document, Contractor shall promptly proceed with the Work involved which will be performed under the applicable conditions of the Contract Documents (except as otherwise specifically provided).

B. If Owner and Contractor are unable to agree on entitlement to, or on the amount or extent, if any, of an adjustment in the Contract Price or Contract Times, or both, that should be allowed as a result of a Work Change Directive, a Claim may be made therefor as provided in Paragraph 10.05.

10.02 *Unauthorized Changes in the Work*

A. Contractor shall not be entitled to an increase in the Contract Price or an extension of the Contract Times with respect to any work performed that is not required by the Contract Documents as amended, modified, or supplemented as provided in Paragraph 3.04, except in the case of an emergency as provided in Paragraph 6.16 or in the case of uncovering Work as provided in Paragraph 13.04.D.

Copyright © 2007 National Society of Professional Engineers for EJCDC. All rights reserved.

10.03 *Execution of Change Orders*

A. Owner and Contractor shall execute appropriate Change Orders recommended by Engineer covering:

1. changes in the Work which are: (i) ordered by Owner pursuant to Paragraph 10.01.A, (ii) required because of acceptance of defective Work under Paragraph 13.08.A or Owner's correction of defective Work under Paragraph 13.09, or (iii) agreed to by the parties;

2. changes in the Contract Price or Contract Times which are agreed to by the parties, including any undisputed sum or amount of time for Work actually performed in accordance with a Work Change Directive; and

3. changes in the Contract Price or Contract Times which embody the substance of any written decision rendered by Engineer pursuant to Paragraph 10.05; provided that, in lieu of executing any such Change Order, an appeal may be taken from any such decision in accordance with the provisions of the Contract Documents and applicable Laws and Regulations, but during any such appeal, Contractor shall carry on the Work and adhere to the Progress Schedule as provided in Paragraph 6.18.A.

10.04 *Notification to Surety*

A. If the provisions of any bond require notice to be given to a surety of any change affecting the general scope of the Work or the provisions of the Contract Documents (including, but not limited to, Contract Price or Contract Times), the giving of any such notice will be Contractor's responsibility. The amount of each applicable bond will be adjusted to reflect the effect of any such change.

10.05 *Claims*

A. *Engineer's Decision Required*: All Claims, except those waived pursuant to Paragraph 14.09, shall be referred to the Engineer for decision. A decision by Engineer shall be required as a condition precedent to any exercise by Owner or Contractor of any rights or remedies either may otherwise have under the Contract Documents or by Laws and Regulations in respect of such Claims.

B. *Notice:* Written notice stating the general nature of each Claim shall be delivered by the claimant to Engineer and the other party to the Contract promptly (but in no event later than 30 days) after the start of the event giving rise thereto. The responsibility to substantiate a Claim shall rest with the party making the Claim. Notice of the amount or extent of the Claim, with supporting data shall be delivered to the Engineer and the other party to the Contract within 60 days after the start of such event (unless Engineer allows additional time for claimant to submit additional or more accurate data in support of such Claim). A Claim for an adjustment in Contract Price shall be prepared in accordance with the provisions of Paragraph 12.01.B. A Claim for an adjustment in Contract Times shall be prepared in accordance with the provisions of Paragraph 12.02.B. Each Claim shall be accompanied by claimant's written statement that the adjustment claimed is the entire adjustment to which the claimant believes it is entitled as a result of said event. The

Copyright © 2007 National Society of Professional Engineers for EJCDC. All rights reserved.

opposing party shall submit any response to Engineer and the claimant within 30 days after receipt of the claimant's last submittal (unless Engineer allows additional time).

C. *Engineer's Action*: Engineer will review each Claim and, within 30 days after receipt of the last submittal of the claimant or the last submittal of the opposing party, if any, take one of the following actions in writing:

1. deny the Claim in whole or in part;

2. approve the Claim; or

3. notify the parties that the Engineer is unable to resolve the Claim if, in the Engineer's sole discretion, it would be inappropriate for the Engineer to do so. For purposes of further resolution of the Claim, such notice shall be deemed a denial.

D. In the event that Engineer does not take action on a Claim within said 30 days, the Claim shall be deemed denied.

E. Engineer's written action under Paragraph 10.05.C or denial pursuant to Paragraphs 10.05.C.3 or 10.05.D will be final and binding upon Owner and Contractor, unless Owner or Contractor invoke the dispute resolution procedure set forth in Article 16 within 30 days of such action or denial.

F. No Claim for an adjustment in Contract Price or Contract Times will be valid if not submitted in accordance with this Paragraph 10.05.

ARTICLE 11 – COST OF THE WORK; ALLOWANCES; UNIT PRICE WORK

11.01 *Cost of the Work*

A. *Costs Included:* The term Cost of the Work means the sum of all costs, except those excluded in Paragraph 11.01.B, necessarily incurred and paid by Contractor in the proper performance of the Work. When the value of any Work covered by a Change Order or when a Claim for an adjustment in Contract Price is determined on the basis of Cost of the Work, the costs to be reimbursed to Contractor will be only those additional or incremental costs required because of the change in the Work or because of the event giving rise to the Claim. Except as otherwise may be agreed to in writing by Owner, such costs shall be in amounts no higher than those prevailing in the locality of the Project, shall not include any of the costs itemized in Paragraph 11.01.B, and shall include only the following items:

1. Payroll costs for employees in the direct employ of Contractor in the performance of the Work under schedules of job classifications agreed upon by Owner and Contractor. Such employees shall include, without limitation, superintendents, foremen, and other personnel employed full time on the Work. Payroll costs for employees not employed full time on the Work shall be apportioned on the basis of their time spent on the Work. Payroll costs shall include, but not be limited to, salaries and wages plus the cost of fringe benefits, which shall include social security contributions, unemployment, excise, and payroll taxes, workers' compensation, health and retirement benefits, bonuses, sick leave, vacation and holiday pay applicable thereto. The expenses of performing Work outside of regular working hours, on

Copyright © 2007 National Society of Professional Engineers for EJCDC. All rights reserved.

Saturday, Sunday, or legal holidays, shall be included in the above to the extent authorized by Owner.

2. Cost of all materials and equipment furnished and incorporated in the Work, including costs of transportation and storage thereof, and Suppliers' field services required in connection therewith. All cash discounts shall accrue to Contractor unless Owner deposits funds with Contractor with which to make payments, in which case the cash discounts shall accrue to Owner. All trade discounts, rebates and refunds and returns from sale of surplus materials and equipment shall accrue to Owner, and Contractor shall make provisions so that they may be obtained.

3. Payments made by Contractor to Subcontractors for Work performed by Subcontractors. If required by Owner, Contractor shall obtain competitive bids from subcontractors acceptable to Owner and Contractor and shall deliver such bids to Owner, who will then determine, with the advice of Engineer, which bids, if any, will be acceptable. If any subcontract provides that the Subcontractor is to be paid on the basis of Cost of the Work plus a fee, the Subcontractor's Cost of the Work and fee shall be determined in the same manner as Contractor's Cost of the Work and fee as provided in this Paragraph 11.01.

4. Costs of special consultants (including but not limited to engineers, architects, testing laboratories, surveyors, attorneys, and accountants) employed for services specifically related to the Work.

5. Supplemental costs including the following:

   a. The proportion of necessary transportation, travel, and subsistence expenses of Contractor's employees incurred in discharge of duties connected with the Work.

   b. Cost, including transportation and maintenance, of all materials, supplies, equipment, machinery, appliances, office, and temporary facilities at the Site, and hand tools not owned by the workers, which are consumed in the performance of the Work, and cost, less market value, of such items used but not consumed which remain the property of Contractor.

   c. Rentals of all construction equipment and machinery, and the parts thereof whether rented from Contractor or others in accordance with rental agreements approved by Owner with the advice of Engineer, and the costs of transportation, loading, unloading, assembly, dismantling, and removal thereof. All such costs shall be in accordance with the terms of said rental agreements. The rental of any such equipment, machinery, or parts shall cease when the use thereof is no longer necessary for the Work.

   d. Sales, consumer, use, and other similar taxes related to the Work, and for which Contractor is liable, as imposed by Laws and Regulations.

   e. Deposits lost for causes other than negligence of Contractor, any Subcontractor, or anyone directly or indirectly employed by any of them or for whose acts any of them may be liable, and royalty payments and fees for permits and licenses.

Copyright © 2007 National Society of Professional Engineers for EJCDC. All rights reserved.

f. Losses and damages (and related expenses) caused by damage to the Work, not compensated by insurance or otherwise, sustained by Contractor in connection with the performance of the Work (except losses and damages within the deductible amounts of property insurance established in accordance with Paragraph 5.06.D), provided such losses and damages have resulted from causes other than the negligence of Contractor, any Subcontractor, or anyone directly or indirectly employed by any of them or for whose acts any of them may be liable. Such losses shall include settlements made with the written consent and approval of Owner. No such losses, damages, and expenses shall be included in the Cost of the Work for the purpose of determining Contractor's fee.

g. The cost of utilities, fuel, and sanitary facilities at the Site.

h. Minor expenses such as telegrams, long distance telephone calls, telephone service at the Site, express and courier services, and similar petty cash items in connection with the Work.

i. The costs of premiums for all bonds and insurance Contractor is required by the Contract Documents to purchase and maintain.

B. *Costs Excluded:* The term Cost of the Work shall not include any of the following items:

1. Payroll costs and other compensation of Contractor's officers, executives, principals (of partnerships and sole proprietorships), general managers, safety managers, engineers, architects, estimators, attorneys, auditors, accountants, purchasing and contracting agents, expediters, timekeepers, clerks, and other personnel employed by Contractor, whether at the Site or in Contractor's principal or branch office for general administration of the Work and not specifically included in the agreed upon schedule of job classifications referred to in Paragraph 11.01.A.1 or specifically covered by Paragraph 11.01.A.4, all of which are to be considered administrative costs covered by the Contractor's fee.

2. Expenses of Contractor's principal and branch offices other than Contractor's office at the Site.

3. Any part of Contractor's capital expenses, including interest on Contractor's capital employed for the Work and charges against Contractor for delinquent payments.

4. Costs due to the negligence of Contractor, any Subcontractor, or anyone directly or indirectly employed by any of them or for whose acts any of them may be liable, including but not limited to, the correction of defective Work, disposal of materials or equipment wrongly supplied, and making good any damage to property.

5. Other overhead or general expense costs of any kind and the costs of any item not specifically and expressly included in Paragraphs 11.01.A.

C. *Contractor's Fee:* When all the Work is performed on the basis of cost-plus, Contractor's fee shall be determined as set forth in the Agreement. When the value of any Work covered by a Change Order or when a Claim for an adjustment in Contract Price is determined on the basis of Cost of the Work, Contractor's fee shall be determined as set forth in Paragraph 12.01.C.

Copyright © 2007 National Society of Professional Engineers for EJCDC. All rights reserved.

D. *Documentation:* Whenever the Cost of the Work for any purpose is to be determined pursuant to Paragraphs 11.01.A and 11.01.B, Contractor will establish and maintain records thereof in accordance with generally accepted accounting practices and submit in a form acceptable to Engineer an itemized cost breakdown together with supporting data.

11.02 *Allowances*

A. It is understood that Contractor has included in the Contract Price all allowances so named in the Contract Documents and shall cause the Work so covered to be performed for such sums and by such persons or entities as may be acceptable to Owner and Engineer.

B. *Cash Allowances:*

1. Contractor agrees that:

a. the cash allowances include the cost to Contractor (less any applicable trade discounts) of materials and equipment required by the allowances to be delivered at the Site, and all applicable taxes; and

b. Contractor's costs for unloading and handling on the Site, labor, installation, overhead, profit, and other expenses contemplated for the cash allowances have been included in the Contract Price and not in the allowances, and no demand for additional payment on account of any of the foregoing will be valid.

C. *Contingency Allowance:*

1. Contractor agrees that a contingency allowance, if any, is for the sole use of Owner to cover unanticipated costs.

D. Prior to final payment, an appropriate Change Order will be issued as recommended by Engineer to reflect actual amounts due Contractor on account of Work covered by allowances, and the Contract Price shall be correspondingly adjusted.

11.03 *Unit Price Work*

A. Where the Contract Documents provide that all or part of the Work is to be Unit Price Work, initially the Contract Price will be deemed to include for all Unit Price Work an amount equal to the sum of the unit price for each separately identified item of Unit Price Work times the estimated quantity of each item as indicated in the Agreement.

B. The estimated quantities of items of Unit Price Work are not guaranteed and are solely for the purpose of comparison of Bids and determining an initial Contract Price. Determinations of the actual quantities and classifications of Unit Price Work performed by Contractor will be made by Engineer subject to the provisions of Paragraph 9.07.

C. Each unit price will be deemed to include an amount considered by Contractor to be adequate to cover Contractor's overhead and profit for each separately identified item.

Copyright © 2007 National Society of Professional Engineers for EJCDC. All rights reserved.

D. Owner or Contractor may make a Claim for an adjustment in the Contract Price in accordance with Paragraph 10.05 if:

1. the quantity of any item of Unit Price Work performed by Contractor differs materially and significantly from the estimated quantity of such item indicated in the Agreement; and

2. there is no corresponding adjustment with respect to any other item of Work; and

3. Contractor believes that Contractor is entitled to an increase in Contract Price as a result of having incurred additional expense or Owner believes that Owner is entitled to a decrease in Contract Price and the parties are unable to agree as to the amount of any such increase or decrease.

ARTICLE 12 – CHANGE OF CONTRACT PRICE; CHANGE OF CONTRACT TIMES

12.01 *Change of Contract Price*

A. The Contract Price may only be changed by a Change Order. Any Claim for an adjustment in the Contract Price shall be based on written notice submitted by the party making the Claim to the Engineer and the other party to the Contract in accordance with the provisions of Paragraph 10.05.

B. The value of any Work covered by a Change Order or of any Claim for an adjustment in the Contract Price will be determined as follows:

1. where the Work involved is covered by unit prices contained in the Contract Documents, by application of such unit prices to the quantities of the items involved (subject to the provisions of Paragraph 11.03); or

2. where the Work involved is not covered by unit prices contained in the Contract Documents, by a mutually agreed lump sum (which may include an allowance for overhead and profit not necessarily in accordance with Paragraph 12.01.C.2); or

3. where the Work involved is not covered by unit prices contained in the Contract Documents and agreement to a lump sum is not reached under Paragraph 12.01.B.2, on the basis of the Cost of the Work (determined as provided in Paragraph 11.01) plus a Contractor's fee for overhead and profit (determined as provided in Paragraph 12.01.C).

C. *Contractor's Fee:* The Contractor's fee for overhead and profit shall be determined as follows:

1. a mutually acceptable fixed fee; or

2. if a fixed fee is not agreed upon, then a fee based on the following percentages of the various portions of the Cost of the Work:

a. for costs incurred under Paragraphs 11.01.A.1 and 11.01.A.2, the Contractor's fee shall be 15 percent;

b. for costs incurred under Paragraph 11.01.A.3, the Contractor's fee shall be five percent;

Copyright © 2007 National Society of Professional Engineers for EJCDC. All rights reserved.

c. where one or more tiers of subcontracts are on the basis of Cost of the Work plus a fee and no fixed fee is agreed upon, the intent of Paragraphs 12.01.C.2.a and 12.01.C.2.b is that the Subcontractor who actually performs the Work, at whatever tier, will be paid a fee of 15 percent of the costs incurred by such Subcontractor under Paragraphs 11.01.A.1 and 11.01.A.2 and that any higher tier Subcontractor and Contractor will each be paid a fee of five percent of the amount paid to the next lower tier Subcontractor;

d. no fee shall be payable on the basis of costs itemized under Paragraphs 11.01.A.4, 11.01.A.5, and 11.01.B;

e. the amount of credit to be allowed by Contractor to Owner for any change which results in a net decrease in cost will be the amount of the actual net decrease in cost plus a deduction in Contractor's fee by an amount equal to five percent of such net decrease; and

f. when both additions and credits are involved in any one change, the adjustment in Contractor's fee shall be computed on the basis of the net change in accordance with Paragraphs 12.01.C.2.a through 12.01.C.2.e, inclusive.

12.02 *Change of Contract Times*

A. The Contract Times may only be changed by a Change Order. Any Claim for an adjustment in the Contract Times shall be based on written notice submitted by the party making the Claim to the Engineer and the other party to the Contract in accordance with the provisions of Paragraph 10.05.

B. Any adjustment of the Contract Times covered by a Change Order or any Claim for an adjustment in the Contract Times will be determined in accordance with the provisions of this Article 12.

12.03 *Delays*

A. Where Contractor is prevented from completing any part of the Work within the Contract Times due to delay beyond the control of Contractor, the Contract Times will be extended in an amount equal to the time lost due to such delay if a Claim is made therefor as provided in Paragraph 12.02.A. Delays beyond the control of Contractor shall include, but not be limited to, acts or neglect by Owner, acts or neglect of utility owners or other contractors performing other work as contemplated by Article 7, fires, floods, epidemics, abnormal weather conditions, or acts of God.

B. If Owner, Engineer, or other contractors or utility owners performing other work for Owner as contemplated by Article 7, or anyone for whom Owner is responsible, delays, disrupts, or interferes with the performance or progress of the Work, then Contractor shall be entitled to an equitable adjustment in the Contract Price or the Contract Times, or both. Contractor's entitlement to an adjustment of the Contract Times is conditioned on such adjustment being essential to Contractor's ability to complete the Work within the Contract Times.

C. If Contractor is delayed in the performance or progress of the Work by fire, flood, epidemic, abnormal weather conditions, acts of God, acts or failures to act of utility owners not under the

Copyright © 2007 National Society of Professional Engineers for EJCDC. All rights reserved.

control of Owner, or other causes not the fault of and beyond control of Owner and Contractor, then Contractor shall be entitled to an equitable adjustment in Contract Times, if such adjustment is essential to Contractor's ability to complete the Work within the Contract Times. Such an adjustment shall be Contractor's sole and exclusive remedy for the delays described in this Paragraph 12.03.C.

D. Owner, Engineer, and their officers, directors, members, partners, employees, agents, consultants, or subcontractors shall not be liable to Contractor for any claims, costs, losses, or damages (including but not limited to all fees and charges of engineers, architects, attorneys, and other professionals and all court or arbitration or other dispute resolution costs) sustained by Contractor on or in connection with any other project or anticipated project.

E. Contractor shall not be entitled to an adjustment in Contract Price or Contract Times for delays within the control of Contractor. Delays attributable to and within the control of a Subcontractor or Supplier shall be deemed to be delays within the control of Contractor.

ARTICLE 13 – TESTS AND INSPECTIONS; CORRECTION, REMOVAL OR ACCEPTANCE OF DEFECTIVE WORK

13.01 *Notice of Defects*

A. Prompt notice of all defective Work of which Owner or Engineer has actual knowledge will be given to Contractor. Defective Work may be rejected, corrected, or accepted as provided in this Article 13.

13.02 *Access to Work*

A. Owner, Engineer, their consultants and other representatives and personnel of Owner, independent testing laboratories, and governmental agencies with jurisdictional interests will have access to the Site and the Work at reasonable times for their observation, inspection, and testing. Contractor shall provide them proper and safe conditions for such access and advise them of Contractor's safety procedures and programs so that they may comply therewith as applicable.

13.03 *Tests and Inspections*

A. Contractor shall give Engineer timely notice of readiness of the Work for all required inspections, tests, or approvals and shall cooperate with inspection and testing personnel to facilitate required inspections or tests.

B. Owner shall employ and pay for the services of an independent testing laboratory to perform all inspections, tests, or approvals required by the Contract Documents except:

1. for inspections, tests, or approvals covered by Paragraphs 13.03.C and 13.03.D below;

2. that costs incurred in connection with tests or inspections conducted pursuant to Paragraph 13.04.B shall be paid as provided in Paragraph 13.04.C; and

3. as otherwise specifically provided in the Contract Documents.

Copyright © 2007 National Society of Professional Engineers for EJCDC. All rights reserved.

C. If Laws or Regulations of any public body having jurisdiction require any Work (or part thereof) specifically to be inspected, tested, or approved by an employee or other representative of such public body, Contractor shall assume full responsibility for arranging and obtaining such inspections, tests, or approvals, pay all costs in connection therewith, and furnish Engineer the required certificates of inspection or approval.

D. Contractor shall be responsible for arranging and obtaining and shall pay all costs in connection with any inspections, tests, or approvals required for Owner's and Engineer's acceptance of materials or equipment to be incorporated in the Work; or acceptance of materials, mix designs, or equipment submitted for approval prior to Contractor's purchase thereof for incorporation in the Work. Such inspections, tests, or approvals shall be performed by organizations acceptable to Owner and Engineer.

E. If any Work (or the work of others) that is to be inspected, tested, or approved is covered by Contractor without written concurrence of Engineer, Contractor shall, if requested by Engineer, uncover such Work for observation.

F. Uncovering Work as provided in Paragraph 13.03.E shall be at Contractor's expense unless Contractor has given Engineer timely notice of Contractor's intention to cover the same and Engineer has not acted with reasonable promptness in response to such notice.

13.04 *Uncovering Work*

A. If any Work is covered contrary to the written request of Engineer, it must, if requested by Engineer, be uncovered for Engineer's observation and replaced at Contractor's expense.

B. If Engineer considers it necessary or advisable that covered Work be observed by Engineer or inspected or tested by others, Contractor, at Engineer's request, shall uncover, expose, or otherwise make available for observation, inspection, or testing as Engineer may require, that portion of the Work in question, furnishing all necessary labor, material, and equipment.

C. If it is found that the uncovered Work is defective, Contractor shall pay all claims, costs, losses, and damages (including but not limited to all fees and charges of engineers, architects, attorneys, and other professionals and all court or arbitration or other dispute resolution costs) arising out of or relating to such uncovering, exposure, observation, inspection, and testing, and of satisfactory replacement or reconstruction (including but not limited to all costs of repair or replacement of work of others); and Owner shall be entitled to an appropriate decrease in the Contract Price. If the parties are unable to agree as to the amount thereof, Owner may make a Claim therefor as provided in Paragraph 10.05.

D. If the uncovered Work is not found to be defective, Contractor shall be allowed an increase in the Contract Price or an extension of the Contract Times, or both, directly attributable to such uncovering, exposure, observation, inspection, testing, replacement, and reconstruction. If the parties are unable to agree as to the amount or extent thereof, Contractor may make a Claim therefor as provided in Paragraph 10.05.

Copyright © 2007 National Society of Professional Engineers for EJCDC. All rights reserved.

13.05 *Owner May Stop the Work*

A. If the Work is defective, or Contractor fails to supply sufficient skilled workers or suitable materials or equipment, or fails to perform the Work in such a way that the completed Work will conform to the Contract Documents, Owner may order Contractor to stop the Work, or any portion thereof, until the cause for such order has been eliminated; however, this right of Owner to stop the Work shall not give rise to any duty on the part of Owner to exercise this right for the benefit of Contractor, any Subcontractor, any Supplier, any other individual or entity, or any surety for, or employee or agent of any of them.

13.06 *Correction or Removal of Defective Work*

A. Promptly after receipt of written notice, Contractor shall correct all defective Work, whether or not fabricated, installed, or completed, or, if the Work has been rejected by Engineer, remove it from the Project and replace it with Work that is not defective. Contractor shall pay all claims, costs, losses, and damages (including but not limited to all fees and charges of engineers, architects, attorneys, and other professionals and all court or arbitration or other dispute resolution costs) arising out of or relating to such correction or removal (including but not limited to all costs of repair or replacement of work of others).

B. When correcting defective Work under the terms of this Paragraph 13.06 or Paragraph 13.07, Contractor shall take no action that would void or otherwise impair Owner's special warranty and guarantee, if any, on said Work.

13.07 *Correction Period*

A. If within one year after the date of Substantial Completion (or such longer period of time as may be prescribed by the terms of any applicable special guarantee required by the Contract Documents) or by any specific provision of the Contract Documents, any Work is found to be defective, or if the repair of any damages to the land or areas made available for Contractor's use by Owner or permitted by Laws and Regulations as contemplated in Paragraph 6.11.A is found to be defective, Contractor shall promptly, without cost to Owner and in accordance with Owner's written instructions:

1. repair such defective land or areas; or

2. correct such defective Work; or

3. if the defective Work has been rejected by Owner, remove it from the Project and replace it with Work that is not defective, and

4. satisfactorily correct or repair or remove and replace any damage to other Work, to the work of others or other land or areas resulting therefrom.

B. If Contractor does not promptly comply with the terms of Owner's written instructions, or in an emergency where delay would cause serious risk of loss or damage, Owner may have the defective Work corrected or repaired or may have the rejected Work removed and replaced. All claims, costs, losses, and damages (including but not limited to all fees and charges of engineers, architects, attorneys, and other professionals and all court or arbitration or other dispute

Copyright © 2007 National Society of Professional Engineers for EJCDC. All rights reserved.

resolution costs) arising out of or relating to such correction or repair or such removal and replacement (including but not limited to all costs of repair or replacement of work of others) will be paid by Contractor.

C. In special circumstances where a particular item of equipment is placed in continuous service before Substantial Completion of all the Work, the correction period for that item may start to run from an earlier date if so provided in the Specifications.

D. Where defective Work (and damage to other Work resulting therefrom) has been corrected or removed and replaced under this Paragraph 13.07, the correction period hereunder with respect to such Work will be extended for an additional period of one year after such correction or removal and replacement has been satisfactorily completed.

E. Contractor's obligations under this Paragraph 13.07 are in addition to any other obligation or warranty. The provisions of this Paragraph 13.07 shall not be construed as a substitute for, or a waiver of, the provisions of any applicable statute of limitation or repose.

13.08 *Acceptance of Defective Work*

A. If, instead of requiring correction or removal and replacement of defective Work, Owner (and, prior to Engineer's recommendation of final payment, Engineer) prefers to accept it, Owner may do so. Contractor shall pay all claims, costs, losses, and damages (including but not limited to all fees and charges of engineers, architects, attorneys, and other professionals and all court or arbitration or other dispute resolution costs) attributable to Owner's evaluation of and determination to accept such defective Work (such costs to be approved by Engineer as to reasonableness) and for the diminished value of the Work to the extent not otherwise paid by Contractor pursuant to this sentence. If any such acceptance occurs prior to Engineer's recommendation of final payment, a Change Order will be issued incorporating the necessary revisions in the Contract Documents with respect to the Work, and Owner shall be entitled to an appropriate decrease in the Contract Price, reflecting the diminished value of Work so accepted. If the parties are unable to agree as to the amount thereof, Owner may make a Claim therefor as provided in Paragraph 10.05. If the acceptance occurs after such recommendation, an appropriate amount will be paid by Contractor to Owner.

13.09 *Owner May Correct Defective Work*

A. If Contractor fails within a reasonable time after written notice from Engineer to correct defective Work, or to remove and replace rejected Work as required by Engineer in accordance with Paragraph 13.06.A, or if Contractor fails to perform the Work in accordance with the Contract Documents, or if Contractor fails to comply with any other provision of the Contract Documents, Owner may, after seven days written notice to Contractor, correct, or remedy any such deficiency.

B. In exercising the rights and remedies under this Paragraph 13.09, Owner shall proceed expeditiously. In connection with such corrective or remedial action, Owner may exclude Contractor from all or part of the Site, take possession of all or part of the Work and suspend Contractor's services related thereto, take possession of Contractor's tools, appliances, construction equipment and machinery at the Site, and incorporate in the Work all materials and

Copyright © 2007 National Society of Professional Engineers for EJCDC. All rights reserved.

equipment stored at the Site or for which Owner has paid Contractor but which are stored elsewhere. Contractor shall allow Owner, Owner's representatives, agents and employees, Owner's other contractors, and Engineer and Engineer's consultants access to the Site to enable Owner to exercise the rights and remedies under this Paragraph.

C. All claims, costs, losses, and damages (including but not limited to all fees and charges of engineers, architects, attorneys, and other professionals and all court or arbitration or other dispute resolution costs) incurred or sustained by Owner in exercising the rights and remedies under this Paragraph 13.09 will be charged against Contractor, and a Change Order will be issued incorporating the necessary revisions in the Contract Documents with respect to the Work; and Owner shall be entitled to an appropriate decrease in the Contract Price. If the parties are unable to agree as to the amount of the adjustment, Owner may make a Claim therefor as provided in Paragraph 10.05. Such claims, costs, losses and damages will include but not be limited to all costs of repair, or replacement of work of others destroyed or damaged by correction, removal, or replacement of Contractor's defective Work.

D. Contractor shall not be allowed an extension of the Contract Times because of any delay in the performance of the Work attributable to the exercise by Owner of Owner's rights and remedies under this Paragraph 13.09.

ARTICLE 14 – PAYMENTS TO CONTRACTOR AND COMPLETION

14.01 *Schedule of Values*

A. The Schedule of Values established as provided in Paragraph 2.07.A will serve as the basis for progress payments and will be incorporated into a form of Application for Payment acceptable to Engineer. Progress payments on account of Unit Price Work will be based on the number of units completed.

14.02 *Progress Payments*

A. *Applications for Payments:*

1. At least 20 days before the date established in the Agreement for each progress payment (but not more often than once a month), Contractor shall submit to Engineer for review an Application for Payment filled out and signed by Contractor covering the Work completed as of the date of the Application and accompanied by such supporting documentation as is required by the Contract Documents. If payment is requested on the basis of materials and equipment not incorporated in the Work but delivered and suitably stored at the Site or at another location agreed to in writing, the Application for Payment shall also be accompanied by a bill of sale, invoice, or other documentation warranting that Owner has received the materials and equipment free and clear of all Liens and evidence that the materials and equipment are covered by appropriate property insurance or other arrangements to protect Owner's interest therein, all of which must be satisfactory to Owner.

2. Beginning with the second Application for Payment, each Application shall include an affidavit of Contractor stating that all previous progress payments received on account of the

Copyright © 2007 National Society of Professional Engineers for EJCDC. All rights reserved.

Work have been applied on account to discharge Contractor's legitimate obligations associated with prior Applications for Payment.

3. The amount of retainage with respect to progress payments will be as stipulated in the Agreement.

B. *Review of Applications:*

1. Engineer will, within 10 days after receipt of each Application for Payment, either indicate in writing a recommendation of payment and present the Application to Owner or return the Application to Contractor indicating in writing Engineer's reasons for refusing to recommend payment. In the latter case, Contractor may make the necessary corrections and resubmit the Application.

2. Engineer's recommendation of any payment requested in an Application for Payment will constitute a representation by Engineer to Owner, based on Engineer's observations of the executed Work as an experienced and qualified design professional, and on Engineer's review of the Application for Payment and the accompanying data and schedules, that to the best of Engineer's knowledge, information and belief:

   a. the Work has progressed to the point indicated;

   b. the quality of the Work is generally in accordance with the Contract Documents (subject to an evaluation of the Work as a functioning whole prior to or upon Substantial Completion, the results of any subsequent tests called for in the Contract Documents, a final determination of quantities and classifications for Unit Price Work under Paragraph 9.07, and any other qualifications stated in the recommendation); and

   c. the conditions precedent to Contractor's being entitled to such payment appear to have been fulfilled in so far as it is Engineer's responsibility to observe the Work.

3. By recommending any such payment Engineer will not thereby be deemed to have represented that:

   a. inspections made to check the quality or the quantity of the Work as it has been performed have been exhaustive, extended to every aspect of the Work in progress, or involved detailed inspections of the Work beyond the responsibilities specifically assigned to Engineer in the Contract Documents; or

   b. there may not be other matters or issues between the parties that might entitle Contractor to be paid additionally by Owner or entitle Owner to withhold payment to Contractor.

4. Neither Engineer's review of Contractor's Work for the purposes of recommending payments nor Engineer's recommendation of any payment, including final payment, will impose responsibility on Engineer:

   a. to supervise, direct, or control the Work, or

Copyright © 2007 National Society of Professional Engineers for EJCDC. All rights reserved.

b. for the means, methods, techniques, sequences, or procedures of construction, or the safety precautions and programs incident thereto, or

c. for Contractor's failure to comply with Laws and Regulations applicable to Contractor's performance of the Work, or

d. to make any examination to ascertain how or for what purposes Contractor has used the moneys paid on account of the Contract Price, or

e. to determine that title to any of the Work, materials, or equipment has passed to Owner free and clear of any Liens.

5. Engineer may refuse to recommend the whole or any part of any payment if, in Engineer's opinion, it would be incorrect to make the representations to Owner stated in Paragraph 14.02.B.2. Engineer may also refuse to recommend any such payment or, because of subsequently discovered evidence or the results of subsequent inspections or tests, revise or revoke any such payment recommendation previously made, to such extent as may be necessary in Engineer's opinion to protect Owner from loss because:

a. the Work is defective, or completed Work has been damaged, requiring correction or replacement;

b. the Contract Price has been reduced by Change Orders;

c. Owner has been required to correct defective Work or complete Work in accordance with Paragraph 13.09; or

d. Engineer has actual knowledge of the occurrence of any of the events enumerated in Paragraph 15.02.A.

C. *Payment Becomes Due:*

1. Ten days after presentation of the Application for Payment to Owner with Engineer's recommendation, the amount recommended will (subject to the provisions of Paragraph 14.02.D) become due, and when due will be paid by Owner to Contractor.

D. *Reduction in Payment:*

1. Owner may refuse to make payment of the full amount recommended by Engineer because:

a. claims have been made against Owner on account of Contractor's performance or furnishing of the Work;

b. Liens have been filed in connection with the Work, except where Contractor has delivered a specific bond satisfactory to Owner to secure the satisfaction and discharge of such Liens;

c. there are other items entitling Owner to a set-off against the amount recommended; or

Copyright © 2007 National Society of Professional Engineers for EJCDC. All rights reserved.

d. Owner has actual knowledge of the occurrence of any of the events enumerated in Paragraphs 14.02.B.5.a through 14.02.B.5.c or Paragraph 15.02.A.

2. If Owner refuses to make payment of the full amount recommended by Engineer, Owner will give Contractor immediate written notice (with a copy to Engineer) stating the reasons for such action and promptly pay Contractor any amount remaining after deduction of the amount so withheld. Owner shall promptly pay Contractor the amount so withheld, or any adjustment thereto agreed to by Owner and Contractor, when Contractor remedies the reasons for such action.

3. Upon a subsequent determination that Owner's refusal of payment was not justified, the amount wrongfully withheld shall be treated as an amount due as determined by Paragraph 14.02.C.1 and subject to interest as provided in the Agreement.

14.03 *Contractor's Warranty of Title*

A. Contractor warrants and guarantees that title to all Work, materials, and equipment covered by any Application for Payment, whether incorporated in the Project or not, will pass to Owner no later than the time of payment free and clear of all Liens.

14.04 *Substantial Completion*

A. When Contractor considers the entire Work ready for its intended use Contractor shall notify Owner and Engineer in writing that the entire Work is substantially complete (except for items specifically listed by Contractor as incomplete) and request that Engineer issue a certificate of Substantial Completion.

B. Promptly after Contractor's notification, Owner, Contractor, and Engineer shall make an inspection of the Work to determine the status of completion. If Engineer does not consider the Work substantially complete, Engineer will notify Contractor in writing giving the reasons therefor.

C. If Engineer considers the Work substantially complete, Engineer will deliver to Owner a tentative certificate of Substantial Completion which shall fix the date of Substantial Completion. There shall be attached to the certificate a tentative list of items to be completed or corrected before final payment. Owner shall have seven days after receipt of the tentative certificate during which to make written objection to Engineer as to any provisions of the certificate or attached list. If, after considering such objections, Engineer concludes that the Work is not substantially complete, Engineer will, within 14 days after submission of the tentative certificate to Owner, notify Contractor in writing, stating the reasons therefor. If, after consideration of Owner's objections, Engineer considers the Work substantially complete, Engineer will, within said 14 days, execute and deliver to Owner and Contractor a definitive certificate of Substantial Completion (with a revised tentative list of items to be completed or corrected) reflecting such changes from the tentative certificate as Engineer believes justified after consideration of any objections from Owner.

D. At the time of delivery of the tentative certificate of Substantial Completion, Engineer will deliver to Owner and Contractor a written recommendation as to division of responsibilities

Copyright © 2007 National Society of Professional Engineers for EJCDC. All rights reserved.

pending final payment between Owner and Contractor with respect to security, operation, safety, and protection of the Work, maintenance, heat, utilities, insurance, and warranties and guarantees. Unless Owner and Contractor agree otherwise in writing and so inform Engineer in writing prior to Engineer's issuing the definitive certificate of Substantial Completion, Engineer's aforesaid recommendation will be binding on Owner and Contractor until final payment.

E. Owner shall have the right to exclude Contractor from the Site after the date of Substantial Completion subject to allowing Contractor reasonable access to remove its property and complete or correct items on the tentative list.

14.05 *Partial Utilization*

A. Prior to Substantial Completion of all the Work, Owner may use or occupy any substantially completed part of the Work which has specifically been identified in the Contract Documents, or which Owner, Engineer, and Contractor agree constitutes a separately functioning and usable part of the Work that can be used by Owner for its intended purpose without significant interference with Contractor's performance of the remainder of the Work, subject to the following conditions:

1. Owner at any time may request Contractor in writing to permit Owner to use or occupy any such part of the Work which Owner believes to be ready for its intended use and substantially complete. If and when Contractor agrees that such part of the Work is substantially complete, Contractor, Owner, and Engineer will follow the procedures of Paragraph 14.04.A through D for that part of the Work.

2. Contractor at any time may notify Owner and Engineer in writing that Contractor considers any such part of the Work ready for its intended use and substantially complete and request Engineer to issue a certificate of Substantial Completion for that part of the Work.

3. Within a reasonable time after either such request, Owner, Contractor, and Engineer shall make an inspection of that part of the Work to determine its status of completion. If Engineer does not consider that part of the Work to be substantially complete, Engineer will notify Owner and Contractor in writing giving the reasons therefor. If Engineer considers that part of the Work to be substantially complete, the provisions of Paragraph 14.04 will apply with respect to certification of Substantial Completion of that part of the Work and the division of responsibility in respect thereof and access thereto.

4. No use or occupancy or separate operation of part of the Work may occur prior to compliance with the requirements of Paragraph 5.10 regarding property insurance.

14.06 *Final Inspection*

A. Upon written notice from Contractor that the entire Work or an agreed portion thereof is complete, Engineer will promptly make a final inspection with Owner and Contractor and will notify Contractor in writing of all particulars in which this inspection reveals that the Work is incomplete or defective. Contractor shall immediately take such measures as are necessary to complete such Work or remedy such deficiencies.

Copyright © 2007 National Society of Professional Engineers for EJCDC. All rights reserved.

14.07 *Final Payment*

A. *Application for Payment:*

1. After Contractor has, in the opinion of Engineer, satisfactorily completed all corrections identified during the final inspection and has delivered, in accordance with the Contract Documents, all maintenance and operating instructions, schedules, guarantees, bonds, certificates or other evidence of insurance, certificates of inspection, marked-up record documents (as provided in Paragraph 6.12), and other documents, Contractor may make application for final payment following the procedure for progress payments.

2. The final Application for Payment shall be accompanied (except as previously delivered) by:

   a. all documentation called for in the Contract Documents, including but not limited to the evidence of insurance required by Paragraph 5.04.B.6;

   b. consent of the surety, if any, to final payment;

   c. a list of all Claims against Owner that Contractor believes are unsettled; and

   d. complete and legally effective releases or waivers (satisfactory to Owner) of all Lien rights arising out of or Liens filed in connection with the Work.

3. In lieu of the releases or waivers of Liens specified in Paragraph 14.07.A.2 and as approved by Owner, Contractor may furnish receipts or releases in full and an affidavit of Contractor that: (i) the releases and receipts include all labor, services, material, and equipment for which a Lien could be filed; and (ii) all payrolls, material and equipment bills, and other indebtedness connected with the Work for which Owner might in any way be responsible, or which might in any way result in liens or other burdens on Owner's property, have been paid or otherwise satisfied. If any Subcontractor or Supplier fails to furnish such a release or receipt in full, Contractor may furnish a bond or other collateral satisfactory to Owner to indemnify Owner against any Lien.

B. *Engineer's Review of Application and Acceptance:*

1. If, on the basis of Engineer's observation of the Work during construction and final inspection, and Engineer's review of the final Application for Payment and accompanying documentation as required by the Contract Documents, Engineer is satisfied that the Work has been completed and Contractor's other obligations under the Contract Documents have been fulfilled, Engineer will, within ten days after receipt of the final Application for Payment, indicate in writing Engineer's recommendation of payment and present the Application for Payment to Owner for payment. At the same time Engineer will also give written notice to Owner and Contractor that the Work is acceptable subject to the provisions of Paragraph 14.09. Otherwise, Engineer will return the Application for Payment to Contractor, indicating in writing the reasons for refusing to recommend final payment, in which case Contractor shall make the necessary corrections and resubmit the Application for Payment.

C. *Payment Becomes Due:*

Copyright © 2007 National Society of Professional Engineers for EJCDC. All rights reserved.

1. Thirty days after the presentation to Owner of the Application for Payment and accompanying documentation, the amount recommended by Engineer, less any sum Owner is entitled to set off against Engineer's recommendation, including but not limited to liquidated damages, will become due and will be paid by Owner to Contractor.

14.08 *Final Completion Delayed*

A. If, through no fault of Contractor, final completion of the Work is significantly delayed, and if Engineer so confirms, Owner shall, upon receipt of Contractor's final Application for Payment (for Work fully completed and accepted) and recommendation of Engineer, and without terminating the Contract, make payment of the balance due for that portion of the Work fully completed and accepted. If the remaining balance to be held by Owner for Work not fully completed or corrected is less than the retainage stipulated in the Agreement, and if bonds have been furnished as required in Paragraph 5.01, the written consent of the surety to the payment of the balance due for that portion of the Work fully completed and accepted shall be submitted by Contractor to Engineer with the Application for such payment. Such payment shall be made under the terms and conditions governing final payment, except that it shall not constitute a waiver of Claims.

14.09 *Waiver of Claims*

A. The making and acceptance of final payment will constitute:

1. a waiver of all Claims by Owner against Contractor, except Claims arising from unsettled Liens, from defective Work appearing after final inspection pursuant to Paragraph 14.06, from failure to comply with the Contract Documents or the terms of any special guarantees specified therein, or from Contractor's continuing obligations under the Contract Documents; and

2. a waiver of all Claims by Contractor against Owner other than those previously made in accordance with the requirements herein and expressly acknowledged by Owner in writing as still unsettled.

ARTICLE 15 – SUSPENSION OF WORK AND TERMINATION

15.01 *Owner May Suspend Work*

A. At any time and without cause, Owner may suspend the Work or any portion thereof for a period of not more than 90 consecutive days by notice in writing to Contractor and Engineer which will fix the date on which Work will be resumed. Contractor shall resume the Work on the date so fixed. Contractor shall be granted an adjustment in the Contract Price or an extension of the Contract Times, or both, directly attributable to any such suspension if Contractor makes a Claim therefor as provided in Paragraph 10.05.

15.02 *Owner May Terminate for Cause*

A. The occurrence of any one or more of the following events will justify termination for cause:

Copyright © 2007 National Society of Professional Engineers for EJCDC. All rights reserved.

1. Contractor's persistent failure to perform the Work in accordance with the Contract Documents (including, but not limited to, failure to supply sufficient skilled workers or suitable materials or equipment or failure to adhere to the Progress Schedule established under Paragraph 2.07 as adjusted from time to time pursuant to Paragraph 6.04);

2. Contractor's disregard of Laws or Regulations of any public body having jurisdiction;

3. Contractor's repeated disregard of the authority of Engineer; or

4. Contractor's violation in any substantial way of any provisions of the Contract Documents.

B. If one or more of the events identified in Paragraph 15.02.A occur, Owner may, after giving Contractor (and surety) seven days written notice of its intent to terminate the services of Contractor:

1. exclude Contractor from the Site, and take possession of the Work and of all Contractor's tools, appliances, construction equipment, and machinery at the Site, and use the same to the full extent they could be used by Contractor (without liability to Contractor for trespass or conversion);

2. incorporate in the Work all materials and equipment stored at the Site or for which Owner has paid Contractor but which are stored elsewhere; and

3. complete the Work as Owner may deem expedient.

C. If Owner proceeds as provided in Paragraph 15.02.B, Contractor shall not be entitled to receive any further payment until the Work is completed. If the unpaid balance of the Contract Price exceeds all claims, costs, losses, and damages (including but not limited to all fees and charges of engineers, architects, attorneys, and other professionals and all court or arbitration or other dispute resolution costs) sustained by Owner arising out of or relating to completing the Work, such excess will be paid to Contractor. If such claims, costs, losses, and damages exceed such unpaid balance, Contractor shall pay the difference to Owner. Such claims, costs, losses, and damages incurred by Owner will be reviewed by Engineer as to their reasonableness and, when so approved by Engineer, incorporated in a Change Order. When exercising any rights or remedies under this Paragraph, Owner shall not be required to obtain the lowest price for the Work performed.

D. Notwithstanding Paragraphs 15.02.B and 15.02.C, Contractor's services will not be terminated if Contractor begins within seven days of receipt of notice of intent to terminate to correct its failure to perform and proceeds diligently to cure such failure within no more than 30 days of receipt of said notice.

E. Where Contractor's services have been so terminated by Owner, the termination will not affect any rights or remedies of Owner against Contractor then existing or which may thereafter accrue. Any retention or payment of moneys due Contractor by Owner will not release Contractor from liability.

Copyright © 2007 National Society of Professional Engineers for EJCDC. All rights reserved.

F. If and to the extent that Contractor has provided a performance bond under the provisions of Paragraph 5.01.A, the termination procedures of that bond shall supersede the provisions of Paragraphs 15.02.B and 15.02.C.

15.03 *Owner May Terminate For Convenience*

A. Upon seven days written notice to Contractor and Engineer, Owner may, without cause and without prejudice to any other right or remedy of Owner, terminate the Contract. In such case, Contractor shall be paid for (without duplication of any items):

1. completed and acceptable Work executed in accordance with the Contract Documents prior to the effective date of termination, including fair and reasonable sums for overhead and profit on such Work;

2. expenses sustained prior to the effective date of termination in performing services and furnishing labor, materials, or equipment as required by the Contract Documents in connection with uncompleted Work, plus fair and reasonable sums for overhead and profit on such expenses;

3. all claims, costs, losses, and damages (including but not limited to all fees and charges of engineers, architects, attorneys, and other professionals and all court or arbitration or other dispute resolution costs) incurred in settlement of terminated contracts with Subcontractors, Suppliers, and others; and

4. reasonable expenses directly attributable to termination.

B. Contractor shall not be paid on account of loss of anticipated profits or revenue or other economic loss arising out of or resulting from such termination.

15.04 *Contractor May Stop Work or Terminate*

A. If, through no act or fault of Contractor, (i) the Work is suspended for more than 90 consecutive days by Owner or under an order of court or other public authority, or (ii) Engineer fails to act on any Application for Payment within 30 days after it is submitted, or (iii) Owner fails for 30 days to pay Contractor any sum finally determined to be due, then Contractor may, upon seven days written notice to Owner and Engineer, and provided Owner or Engineer do not remedy such suspension or failure within that time, terminate the Contract and recover from Owner payment on the same terms as provided in Paragraph 15.03.

B. In lieu of terminating the Contract and without prejudice to any other right or remedy, if Engineer has failed to act on an Application for Payment within 30 days after it is submitted, or Owner has failed for 30 days to pay Contractor any sum finally determined to be due, Contractor may, seven days after written notice to Owner and Engineer, stop the Work until payment is made of all such amounts due Contractor, including interest thereon. The provisions of this Paragraph 15.04 are not intended to preclude Contractor from making a Claim under Paragraph 10.05 for an adjustment in Contract Price or Contract Times or otherwise for expenses or damage directly attributable to Contractor's stopping the Work as permitted by this Paragraph.

Copyright © 2007 National Society of Professional Engineers for EJCDC. All rights reserved.

ARTICLE 16 – DISPUTE RESOLUTION

16.01 *Methods and Procedures*

A. Either Owner or Contractor may request mediation of any Claim submitted to Engineer for a decision under Paragraph 10.05 before such decision becomes final and binding. The mediation will be governed by the Construction Industry Mediation Rules of the American Arbitration Association in effect as of the Effective Date of the Agreement. The request for mediation shall be submitted in writing to the American Arbitration Association and the other party to the Contract. Timely submission of the request shall stay the effect of Paragraph 10.05.E.

B. Owner and Contractor shall participate in the mediation process in good faith. The process shall be concluded within 60 days of filing of the request. The date of termination of the mediation shall be determined by application of the mediation rules referenced above.

C. If the Claim is not resolved by mediation, Engineer's action under Paragraph 10.05.C or a denial pursuant to Paragraphs 10.05.C.3 or 10.05.D shall become final and binding 30 days after termination of the mediation unless, within that time period, Owner or Contractor:

1. elects in writing to invoke any dispute resolution process provided for in the Supplementary Conditions; or

2. agrees with the other party to submit the Claim to another dispute resolution process; or

3. gives written notice to the other party of the intent to submit the Claim to a court of competent jurisdiction.

ARTICLE 17 – MISCELLANEOUS

17.01 *Giving Notice*

A. Whenever any provision of the Contract Documents requires the giving of written notice, it will be deemed to have been validly given if:

1. delivered in person to the individual or to a member of the firm or to an officer of the corporation for whom it is intended; or

2. delivered at or sent by registered or certified mail, postage prepaid, to the last business address known to the giver of the notice.

17.02 *Computation of Times*

A. When any period of time is referred to in the Contract Documents by days, it will be computed to exclude the first and include the last day of such period. If the last day of any such period falls on a Saturday or Sunday or on a day made a legal holiday by the law of the applicable jurisdiction, such day will be omitted from the computation.

Copyright © 2007 National Society of Professional Engineers for EJCDC. All rights reserved.

17.03 *Cumulative Remedies*

A. The duties and obligations imposed by these General Conditions and the rights and remedies available hereunder to the parties hereto are in addition to, and are not to be construed in any way as a limitation of, any rights and remedies available to any or all of them which are otherwise imposed or available by Laws or Regulations, by special warranty or guarantee, or by other provisions of the Contract Documents. The provisions of this Paragraph will be as effective as if repeated specifically in the Contract Documents in connection with each particular duty, obligation, right, and remedy to which they apply.

17.04 *Survival of Obligations*

A. All representations, indemnifications, warranties, and guarantees made in, required by, or given in accordance with the Contract Documents, as well as all continuing obligations indicated in the Contract Documents, will survive final payment, completion, and acceptance of the Work or termination or completion of the Contract or termination of the services of Contractor.

17.05 *Controlling Law*

A. This Contract is to be governed by the law of the state in which the Project is located.

17.06 *Headings*

A. Article and paragraph headings are inserted for convenience only and do not constitute parts of these General Conditions.

Copyright © 2007 National Society of Professional Engineers for EJCDC. All rights reserved.

SECTION 00800

SUPPLEMENTAL CONDITIONS

1. Amending the Standard General Conditions of the Construction Contract Prepared by Engineers Joint Contract Documents Committee

2. Insurance Requirements

3. Supplementary Conditions

AMENDING THE STANDARD GENERAL CONDITIONS OF THE CONSTRUCTION CONTRACT PREPARED BY ENGINEERS JOINT CONTRACT DOCUMENTS COMMITTEE
(EJCDC NO. C-700, 2007 EDITION)

(Sub) Paragraph No.	
2.01B	Delete this paragraph and substitute the following: Before any Work at the Site is started, CONTRACTOR shall deliver to OWNER, with copies to each additional insured identified in the Supplementary Conditions, certificates of insurance (and other evidence of insurance which OWNER or any additional insured may reasonably request) which CONTRACTOR is required to purchase and maintain in accordance with Article 5.
2.03	Delete the last sentence.
3.02A.1	Delete the phrase starting "shall mean" through the end of this sentence and substitute the following: shall mean the standard, specification, manual, code, or Laws or Regulations in effect and applicable at the time in question, except as may be otherwise specifically stated in the Contract Documents.
3.03A.3	Delete this paragraph and replace with the following: CONTRACTOR shall be liable to OWNER or ENGINEER for failure to report any such conflict, error, ambiguity or discrepancy if CONTRACTOR knew or reasonably should have known thereof.
4.01A	Delete the last sentence.
4.01B	Delete this subparagraph in its entirety.
4.03C.3	Delete this subparagraph in its entirety.
4.04B.2	Delete the phrase "or not shown or indicated with reasonable accuracy" following the word "indicated." Delete the last sentence.
4.06C	Add the following to the first sentence: "unless CONTRACTOR caused or contributed to such Hazardous Environmental Condition."

4.06D Delete the last sentence.

4.06E Delete the last sentence.

4.06F Delete the second sentence.

4.06G Delete this subparagraph in its entirety.

4.06H Delete the last sentence.

5.03B Delete this subparagraph in its entirety.

5.04B.7 Insert the following new subparagraph:

7. “all coverage shall be written on an occurrence basis.

5.06A Delete this subparagraph in its entirety and substitute the following:

Owner may, in its discretion, purchase and maintain property insurance upon the Work at the Site.

5.06B Delete this subparagraph in its entirety.

5.06D Delete this subparagraph in its entirety and substitute the following:

The risk of loss within any identified deductible amount will be borne by CONTRACTOR, Subcontractors, or others suffering any such loss, and if any of them wishes property insurance coverage within the limits of such amounts, each may purchase and maintain it at the purchaser’s own expense.

5.07A Delete all text after the first sentence.

5.07B Delete this subparagraph in its entirety.

5.07C Delete this subparagraph in its entirety.

5.08 Delete this paragraph in its entirety.

5.09 Delete this paragraph in its entirety.

5.10 Delete this paragraph in its entirety and substitute the following:

OWNER may occupy or use a portion of the Work prior to Substantial Completion.

6.05A Add the following to the second sentence “, and in accordance with G.L. c.30, §39M.”

6.06F Insert the following at the beginning of this subparagraph:

“Except as required by and indicated in the specifications and contract documents pursuant to G.L. c.149, §44F,”

6.07A Delete the second sentence.

6.09C Delete the last sentence.

6.13E Delete the text in parentheses at the end of the first sentence.

6.20A Delete the parenthetical phrase “(other than the Work itself).”

6.20.A Change the phrase “negligent act or omission” to “negligent or wrongful act or omission.”

7.01.A.2 Delete this subparagraph in its entirety.

7.01.B Delete the last sentence.

7.02 Delete this paragraph in its entirety.

8.02 Delete the phrase “to whom CONTRACTOR makes no reasonable objection.”

8.07 Delete this paragraph in its entirety.

8.09 Insert the following after the first sentence: “However, the OWNER shall have the right to direct the CONTRACTOR to perform the Work according to any sequence schedule set forth in the Contract Documents or established pursuant thereto.”

9.02B Insert the following at the end of this subparagraph: “However, the ENGINEER shall have the right to direct the CONTRACTOR to perform the Work according to any sequence schedule set forth in the Contract Documents or established pursuant thereto.”

9.03 Delete the last sentence.

9.04 Delete the last sentence.

9.08C Delete the final phrase “subject to the provisions of paragraph 10.05.”

9.09B Insert the following after the first sentence:

"However, the ENGINEER shall have the right to direct the CONTRACTOR to perform the Work according to any sequence schedule set forth in the Contract Documents or established pursuant thereto."

10.03A.3 Delete this subparagraph in its entirety.

11.01A.5 Delete subparagraphs a, b, d, e, f, g, and h.

11.02 Delete this paragraph in its entirety.

12.01B.3 Delete the last phrase "(determined as provided in paragraph 12.01.C)."

12.01C.2 Delete this subparagraph in its entirety.

12.03B Delete this subparagraph in its entirety.

12.03F Insert the following new subparagraph:

3. Delays caused by or within the control of the OWNER. In such event, the CONTRACTOR'S sole remedy shall be an extension of the Contract Time. Notwithstanding anything to the contrary in the Contract Documents, Contractor shall not be eligible for any increase in the Contract Price/Sum on account of any delay in the work, no matter by whom such delay is caused, and Contractor shall make no claim for such an increase, whether such claim is styled as a claim for delay damages, acceleration of work, loss of production, or otherwise.

13.01 Delete the word "Prompt" at the beginning of the subparagraph.

13.03F Delete the balance of this subparagraph after the words "CONTRACTOR's expense."

13.04D Delete this subparagraph in its entirety.

13.08 Delete the fourth sentence.

13.09C Delete the second sentence.

14.02A.1 Delete the first phrase prior to the words, "Contractor shall" and substitute in place thereof the following: "On a monthly basis and in accordance with G.L. c.30, §39G,".

14.02A.3 Delete this subparagraph and substitute the following: "Retainage shall be in accordance with G.L. c.30, §39G.

14.02C Delete this subparagraph and substitute the following:

Payment shall be made in accordance with G.L. c.30, §39G.

14.02D.2 Delete the words “immediate” and “promptly”.

14.02D.3 Delete this subparagraph in its entirety.

14.04C Delete the third sentence and substitute the following:

“OWNER shall review the tentative certificate and make written objection to ENGINEER as to any provisions of the certificate or attached list.”

Delete the phrase “within 14 days after submission of the tentative certificate to OWNER” in the fourth sentence. Delete the phrase “within said 14 days” in the fifth sentence.

14.05 Delete the phrase “subject to the following conditions” at the end of the first sentence and delete subparagraphs 1 and 2 in their entirety.

14.07B.1 Delete the phrase “within ten days after receipt of the final Application for Payment,” in the first sentence.

14.07C Delete this subparagraph in its entirety and substitute the following:

Final payment shall be made in accordance with G.L. c.30, §39G.

14.09A.1 Delete this subparagraph in its entirety.

15.01 Delete this subparagraph in its entirety and substitute the following:

OWNER may suspend the work or any portion thereof in accordance with G.L. c.30, §39O.

15.03A Delete from subparagraph 1 the phrase “including fair and reasonable sums for overhead and profit on such Work;” and from subparagraph 2 the phrase “plus fair and reasonable sums for overhead and profit on such expenses”; and delete subparagraphs 3 and 4 in their entirety.

15.04B Delete the last sentence.

SUPPLEMENTAL CONDITIONS

§ SC 1.1 INTRODUCTION

The following provisions modify, change, delete from or add to Section 00500 Agreement. Where any Subsection of the Agreement is modified or any Article Paragraph, Subparagraph or Clause thereof is modified or deleted by these Supplemental Conditions, the unaltered provisions of that Article, Paragraph, Subparagraph or Clause shall remain in effect.

§ SC 2.1 PREVAILING WAGE

In accordance with General Laws Chapter 149, Section 26 through 27D, the Contractor is obligated to comply with the prevailing wage rates established by the Commissioner of the Department of Labor and Workforce Development for mechanics, apprentices, chauffeurs, teamsters and laborers employed on the Project. The schedule of applicable prevailing wage rates for the Project, together with a Certificate of Compliance therewith, are set forth in Attachment A.

§ SC 3.1 CONTRACTOR'S LIABILITY INSURANCE

In no case shall the limits of liability be less than the following:

1. Contractor's Liability Insurance

a. Workers' Compensation:

1. State: Statutory

2. Employer Liability:

$___$1,000,000.00_____ Bodily Injury by Accident
$___$1,000,000.00_____ Bodily Injury by Disease - policy limit
3. $___$1,000,000.00_____Bodily Injury by Disease - each
$___$3,000,000.00_____ Umbrella Liability - all limits

b. Comprehensive General Liability (including Premises-Operations; Independent Contractor's Protective; Products and Completed Operations; Broad Form Property Damage):

1. Bodily Injury:
$_____ Each Occurrence
$_____ Aggregate

2. Products and Completed Operations
$_____ Each Occurrence (bodily injury and property damage)
$_____ Aggregate

Products and Completed
$_____ Operations

3. Property Damage Liability (including coverage for XCU hazards).
$_____ Each Occurrence
$_____ Aggregate

4. Products and Completed Operations insurance shall be maintained for a minimum period of 2 years after final payment and Contractor shall continue to

provide evidence of such coverage to Owner on an annual basis during the aforementioned.

5. Contractual Liability (Hold Harmless Coverage):
   $_____ Bodily Injury Each Occurrence
   $_____ Property Damage Each Occurrence
   $_____ Property Damage Aggregate

6. Personal Injury, with Employment Exclusion deleted:
   $_____ All Limits

c. Comprehensive Automobile Liability (owned, non-owned, hired):

1. Bodily Injury
   $_____ Each Person
   $_____ Each Accident

2. Property Damage
   $_____ Each Accident

d. Property Insurance / Builders Risk: the full Contact sum

e. Umbrella Liability Coverage
   $_____ All Limits

1.01 Reference to Contract GENERAL CONDITIONS

Attention is directed to the General Conditions (including the Contract Bid Forms) of which these Specifications are hereby made a part.

1.02 Project Site

The site is located at 15 Harbor View Way, Nantucket, MA.

1.03 Scope of Work

The work is as described in Specification Section 01000 – General Requirements, section 1.02 – Description.

1.04 Work Described By

The work of this Contract is described within the following contract documents:

A. The Notice to Bidders, Standard General Conditions, Supplemental Conditions, and Contract including Performance and Payment Bonds.

B. The Technical Specifications: refer to the "Table of Contents".

C. The Drawings.

D. Addenda issued during the bidding period which are hereby made a part of these Specifications.

1.05 Pre-Bidding Conference

A. A pre-bidding conference for prospective bidders will be held at 10:30 a.m. local time on November 21, 2016 at the project site.

B. At the conference the project will be discussed in general. It is desirable that all prospective bidders attend. The Contract, Specifications, Drawings and any other aspects of this project will be explained in response to questions by those attending. For interpretations of questions requiring legal, administrative, or engineering decision, prospective bidders shall comply with paragraph .07.

1.06 Inspection of Site

A. Prior to the submission of bids, each bidder shall make a thorough examination of each and every location where work is to be performed. Failure to visit the site will in no way relieve the successful bidder from his responsibility to complete all work in accordance with the Drawings and Specifications and without additional cost to the Town.

B. The Contractor must satisfy himself, by his own investigation and research, regarding conditions affecting the work to be done, the equipment, labor and materials needed, and make his bid in sole reliance thereon.

1.07 Question During Bidding Period

A. All questions by prospective bidders, during the bidding process, as to the interpretation of the Notice to Bidders, Form of Proposal, Form of Contract, Plans, Specifications or Form of Performance Bond and Labor and material or Payment Bond must be submitted in writing to the Town and must be in its possession at least six calendar days before the date herein set for the receipt of general bids. Said Town will then mail, by certified mail with return receipt requested, to bidders who have taken out plans at the address given by them, interpretations of all questions so raised which in its opinion require interpretations. Verbal interpretations given to perspective bidders will have no standing.

B. Written inquiries shall be submitted by mail, email or fax and addressed to:

Mr. Charles Gibson
Deputy Chief of Police
Nantucket Police Department
4 Fairgrounds Road
Nantucket, MA 02554-2804
(tel. 508-228-1212)
cgibson@police.Nantucket-MA.gov.

1.08 Drawings

A. Bidding Drawings

1. Proposal shall be based upon the bidding Drawings listed and included with the Specifications as issued to all bidders, which drawings may be modified by addenda issued by the Town during the bidding period, and later will, as modified by the addenda, become the Contract Drawings.

2. Wherever existing conditions or construction not required as part of the work of the Contract are shown on the Drawings, they are so shown as a source of information to the Bidder. The Town, believing such information to be substantially correct, assumes no responsibility thereof.

B. Construction Drawings

1. The Drawings are made to scale, and unless otherwise noted, all working dimensions shall be taken from the written figured dimensions or by actual measurements made at the job, but in no case by scaling. The Contractor shall study and compare all Drawings and verify all figures before laying out or constructing the work and shall be responsible for any and all errors in his work, which might have been avoided thereby. Whether or not an error is believed to exist, deviations from the Drawings and the dimensions given thereon shall be made only after all measurements of existing established conditions notwithstanding the figured

dimensions on the Drawings have been determined. When figured dimensions are not in agreement with the Contractor's measurements, he shall immediately notify the Town.

2. If the Contractor during the Progress of the work discovers any discrepancies between the Drawings and the Specifications, error or omissions on the Drawings or any discrepancies between the physical condition of the work and the Drawings, he shall immediately notify the Town, who shall promptly adjust the same.

3. Any work performed after the discovery of discrepancies without approval of the Town shall be at the Contractor's risk and expense.

4. The Contractor shall have made himself familiar with all conditions affecting the nature and manner of performing the work and shall not be entitled to any extra compensation for any work or expense arising from or caused by his neglect to have verified all existing conditions and requirements.

5. Where equipment and lines of piping are shown diagrammatically, the Contractor shall be responsible for the coordination and orderly arrangement of the various lines of embedded piping and conduit included in the work of this Contract. He shall coordinate the work of any Subcontractor and prevent all interferences between the equipment, lines of piping or structural and architectural features, and avoid any unsightly arrangements in exposed work.

C. Record Drawings

The Contractor shall keep at the site a record set of prints on which he shall clearly and accurately record all approved changes and/or additions to the contract work made to meet field conditions. The set of Drawings shall be used for this purpose only, and shall be delivered to the Town in good condition at the completion of the work before the final payment shall be due and payable, as an accurate record of the work as actually executed.

1.10 Equality of Products

A. The words "or equal" are understood:

1. To follow:

a. The name of any maker or vendor.
b. Any trade name, plant or catalog number.
c. Any detail description which is used on the Drawings or in the Specifications to define the material, article, assembly, or system required.

2. To mean any material, article assembly, or system which, in the opinion of the Town, is at least equal in quality, appearance, strength and design to the material, article, assembly, named or described and will perform at least equally to the functions imposed by the general design, but the words "or equal" shall not be construed to permit substantial departure from the detailed requirements of the

Drawings and Specifications for any material, article, assembly or system or of any component part thereof. The burden of proving equal quality shall be on the Contractor.

1.11 Substitutions

A. All substitutions of products, equipment, materials and methods described in these Specifications shall be made in consolidated requests for the trades required to complete the work. Requests for substitution will not be considered until the consolidated request has been submitted. Requests for substitution will not be considered until the consolidated request has been submitted. Regardless of whether or not the phrase "or equal" or similar notation appears in the Specifications or on the Drawings, no substitutions will be allowed except upon written request from the Contractor and written approval from the Town.

B. Requests shall include, for each submission, the following:

1. A complete description of the proposed alternate material including sufficient technical data to enable the Town to quickly arrive at a decision as to the suitability of the substitution.

2. The reason for substitution.

3. A comparison of the price of the substitution with the price of the item specified.

4. A comparison of the delivery time required for the item specified.

5. Samples if requested by the Town.

C. No request for substitution will be considered after approval of the consolidated request except by written emergency request made because of non-availability of the specified material, delay of delivery, or to adjust to unforeseen field conditions. This written emergency request for substitution shall be accompanied with a photocopy of a letter from the supplier or manufacturer stating that he is unable to furnish the specified materials and the reasons that he is unable to furnish the materials.

D. The emergency request shall be made to the Town at the job site and shall be made as soon as the difficulty is known so that the Town shall have sufficient time to appraise the substitution. If the Contractor's proposed substitution in the emergency request is declined, the Town shall have the privilege of specifying a different substitution, which has a price that does not markedly exceed the price of the item in these Specifications.

E. The Contractor shall have provided in his proposal for furnishing the specified items named or described in these Specifications or on the Drawings and, if substitutions are declined by the Town, shall be prepared to provide the specified items at the proper time necessary to complete the contract work as scheduled. Submittal of the bid by the Contractor shall be representation that the proposal price included the specified items and that he is able to supply the specified items.

F. The Contractor shall not be entitled to additional compensation for cost of extra work resulting from any substitutions requested by him. If the cost of the material substituted is less than the cost of the material specified, such savings in cost shall be credited to the Town and deducted from the contract price.

1.12 Control of Materials

A. Source of Supply and Quality

1. Where no inspection of materials is arranged for by the Town and before such materials are incorporated into the work, the Contractor will be required to submit to the Town for approval, three copies of the Manufacturer's or Supplier's statement for each kind of material furnished, which shall contain the following information:

   a. Project to which the material is supplied.

   b. Name of the Contractor to which the material is supplied.

   c. Kind of material supplied.

   d. Quantity of material represented by the certificate.

   e. Means of identifying the consignment, such as label, marking, seal number, etc.

   f. Date and method of shipment

   g. Statement to the effect that the material has been tested and found in conformance with the pertinent parts of the Contract.

   h. Results of all required tests, or in lieu of furnishing the results, a statement with the results of all required tests pertinent to the certificate, but not submitted, shall be maintained available by the undersigned for a period of not less than three years from the date of final acceptance of the final payment by the Town.

   i. Signature of a person having legal authority to bind the supplier.

B. Samples and Tests

1. The inspection and sampling of materials will be carried out, ordinarily, at the site of the contract work. The Town will not assume any obligation for the inspection and sampling of materials at source. The responsibility of incorporating satisfactory material in the work rests entirely with the Contractor, notwithstanding any prior inspection or test. Mix designs for concrete shall be submitted, no less than 14 days in advance of proposed use of these materials, for approval by the Town or its agent.

2. Tests of materials will be made by the Contractor, at the expense of the Contractor and under the direction of the Town. The Contractor or his suppliers shall furnish facilities as the Town may require for collecting and forwarding samples and shall not make use of, nor incorporate into the work, any material represented by samples until the required tests have been made and the material accepted, unless otherwise directed. The Contractor in all cases shall furnish the required samples without charge. In the event of failure of materials to meet Specifications, any retesting of new materials or of the same materials after reworking, shall be paid for by the Contractor.

3. However, such preliminary approval by the Town does not relieve the Contractor of the responsibility for placing satisfactory material in the work as determined by subsequent samples taken at the source or on the project prior to the material being incorporated into the work and if the project samples test satisfactorily, the material will be considered to meet the contract requirements as to quality. If such sampling and testing reveal that the material is unsatisfactory, it will then be the responsibility of the Contractor to remove it from the work or blend it with such other material so that unacceptable material will be produced. The removal and blending of such material shall be done by the Contractor without additional compensation.

C. Delivery and Storage of Materials

1. Materials shall be stored as to assure the preservation of their quality and fitness for the work. Stored materials, even though approved before storage, may again be inspected prior to their use in the work. Stored materials shall be located so as to facilitate their prompt inspection.

2. Private property shall not be used for storage without written permission of the owner or lessee, and if requested by the Town copies of such written permission shall be furnished by him.

3. All storage areas shall be restored to their original condition by the Contractor at his expense.

4. Materials and equipment shall be progressively delivered to the site so that there will be neither delay in the progress of work nor in accumulation of material that is not to be used within a reasonable time.

5. Materials shall be stored at the expense of the Contractor so as to ensure the preservation of their quality and fitness for the work. Stored materials shall be protected from damage.

6. The Town will pay up to 75 percent of the costs of stored materials upon receipt of a paid invoice accompanied by an insurance certificate approved by the Town and copies of bills of lading or other similar shipping documentation evidencing that the materials have actually been received by the Contractor. All materials covered by partial payments shall become the sole property of the Town, but this provision shall not be construed as reliving the Contractor from the sole responsibility for the

care and protection of materials for which payments have bene made or the restoration of any damaged work, or as a waiver of the right of the Town to require the fulfillment of all terms of the contract.

D. Scheduling of Designated Sources of Materials

1. The Contractor shall designate the proposed sources of all material in time to permit all required testing and inspection before the material is needed to be incorporated into the work. The Contractor shall have no claims because of his failure to designate the proposed source of the material in time for adequate testing and inspection.

2. Necessary arrangements shall be made to permit the Town to make factory, shop or other inspection of materials, or equipment ordered for the work during process of manufacturing or fabrication or in storage elsewhere than the site of the work.

1.13 Disposal of Materials

No Disposal Area: Where no disposal area is shown on the Drawings the Contractor shall remove all materials off the Town's property/job site to a location approved by the Town. Documentation certifying proper disposal shall be submitted to the Town.

1.14 Vehicle Weight Limits

A. The Contractor's attention is directed to Chapter 90, Section 19A of the General Laws, as amended, concerning the weight limits for construction type motor vehicles.

B. No materials supplied for the project shall be accepted in vehicles whose gross weight exceed the legal load limits as determined by the regulatory agencies of the Commonwealth and Federal Government.

1.15 CONSTRUCTION PROGRESS SCHEDULE

A. The Contractor shall submit to the Town, his information, and a schedule of his proposed operations, within seven (7) calendar days of receipt of the Notice to Proceed.

B. The Town will schedule and administer a preconstruction meeting, periodic progress meetings and specially called meetings throughout the progress of the work. The Contractor shall attend said meetings to ascertain that all work is expedited consistent with the contract documents and construction schedules. The time and location of such meetings will be designated by the Town. The Contractor must attend the preconstruction meetings and all periodic progress and specially called meetings throughout the progress of the work. Representatives of the Contractor, Subcontractors and major suppliers attending said meeting shall be qualified and authorized to act on behalf of the entity each represents.

C. During the progress of the work, the Contractor may be required at certain times, to submit to the Town, weekly, or bi-weekly schedules, showing the anticipated activity during that time frame, in the event that project completion time constraints are not being accomplished as determined by the Town. The Contractor shall continuously update the

schedules in a manner to bring the project within anticipated time frames. The procedure and extent of the schedules will be determined by the Town.

D. Whenever, in the opinion of the Town, the work is not proceeding in accordance with the approved schedule of operations, the Contractor shall promptly take such measures as are necessary to return the work to the proper schedule, directed by the and at no additional cost to the Town. Such measures shall include, but not be limited to employing additional or different personnel, equipment or construction methods, employing additional shifts, or working overtime. Such measures shall be continued until compliance with the schedule of operations has been obtained.

E. If the project involves dredging and is not completed within the designated dredging period set forth by the Environmental Regulatory agencies, the Contractor will be required to complete the dredging in the next permitted dredge period. No additional compensation will be paid for mobilization and demobilization.

1.16 Project Sign

A. The Contractor shall furnish and erect at a suitable location, approved by the Town, at the start of the work, a project sign that has the dimensions of at least five (5) feet long by three (3) feet high, referencing; the project title, owner including names of the mayor, director of public works, funded by, partially funded and managed by the Town, and consultant.

B. The project sign shall be made on ¾” marine grade plywood, three feet (3’) high by five feet (5’) long. The Town will provide the Contractor the verbiage on the sign.

1.17 Contractor's General Responsibilities

A. In performance of the Contract and insofar as his employees are concerned, the Contractor shall be responsible, in addition to items specified elsewhere in the Contract, for the safety of his own crew and equipment whether inside or outside of the construction area.

B. Permits

1. The Contractor is responsible for securing and paying for prior to the start of the related work, all permits required for the execution of the work of this Contract, including but not limited to building construction related permits including specific trade and road cut permits. All work found to be not in conformance with the permits or these Specifications, shall be removed and replaced at the expense of the Contractor.

2. All permits secured by the Contractor, complete with the application and order of conditions, shall be kept on file in the Contractor's office and field office with copies submitted to the Town.

C. Protection of the construction and all adjoining premises or property from all damage until the work has been accepted by the Town, and making good at his own expenses all damages thereto arising of any contract operations.

D. Strictly prohibiting and taking all necessary measures to prevent the committing of nuisance on the land of the Town and adjacent properties. Access shall be maintained to any building, waterway or roadway that is connected to any work included in this Contract. The Contractor shall provide and maintain access for occupant entrance to and exit from all adjacent buildings and properties at all times.

E. The Contractor shall construct for the protection of the construction area and the public: suitable barriers, barrier fences, traffic signs, temporary lighting, bridges, illuminating traffic signs and other traffic devices as directed by the Town conforming with the manual of Uniform Traffic Control Devices for streets and highways published by the Bureau of Public Roads, also by a sufficient number of watchmen at all times, and/or directed by the Town.

F. Construction activity shall be staged to minimize interference with the public travel ways, park operations and adjacent areas. Access shall be maintained to any building, waterway or roadway that is connected to any work included in this Contract. Pedestrian access shall be maintained on the sidewalk adjacent to Western Avenue throughout the duration of the project.

G. The Contractor shall at his expense protect existing structures, shall provide lights and fences and take all other precautions that may be necessary to protect life and property. He shall carry on all operations and use equipment of such types that all noise resulting from construction operations will be kept to a minimum. All temporary facilities required for the general protection of the public and the work shall be substantial in character, neat in appearance and subject to approval of the Town.

1.18 Contractor's STAGING

A. Where no yard or staging area is shown on the Drawings, the Contractor may request a location; such request and location shall be subject to the approval of the Town.

B. Maintenance and security of the area, materials, and equipment within it shall be the responsibility of the Contractor.

C. The cost of the above paragraphs shall be included in the contract price and direct or separate payment will be made to the Contractor.

1.19 Security

The General Contractor shall be wholly responsible for patrolling and protecting the work under construction and the materials on the site, and the existing work. The general Contractor shall have full responsibility for the security of the property and the Town’s materials stored or otherwise located upon the site, and shall reimburse the Town for any loss, damage, or injury to such materials, except as may be directly caused by the Town, its agents or its employees.

1.20 Cooperation with Others

The Contractor shall coordinate his work with that of Subcontractors, if any are working on the project, and allow them all necessary access to construction areas, so as to facilitate the progress of work. The Contractor shall coordinate the work of all trades to complete the work within the time required. Each trade shall afford all other trades every reasonable opportunity for installation of their work and for storage of material. The Contractor should note that other separate contracts and/or Contractors may be working on, near, or in conjunction with work covered by this Contract. Each Contractor shall conduct his work so as not to interfere with or hinder the progress or completion of the work being performed by other Contract and/or Contractors.

1.21 Workmanship

All workmanship necessary to complete the work required by these Specifications shall be of the highest quality. The Contractor shall, at all times employ workmen in sufficient number and of the various degrees of skill and experience required to perform satisfactorily the work of these Specifications in accordance with the best modern standard practice. The Contractor shall bear the entire expense and no separate or direct payment shall be made as a result of extra work which may be necessary because of inferior workmanship, or for specific items of work which are normally considered a part of good workmanship in completing any particular phase of the work.

1.22 Protection and Restoration of Property

A. The Contractor shall, at his own expense, preserve and protect from injury all property either public or private along and adjacent to the proposed work. He shall be responsible for any repair, at his own expense, and any and all damage or injury thereto, arising out of or in consequence of any act of omission, neglect or misconduct in the execution of the work by his employees or Subcontractors in the performance of the work covered by the Contract Prior to completion and acceptance thereof. He shall exercise special care during his operations to avoid injury to underground structures such as water or gas mains, pipes, conduits, manholes, catch basins, direct buried electrical cables, etc.

B. Written notice shall be given by the Contractor to all public service corporations or officials owning or having charge of public or private utilities of his intention to commence operations affecting such utilities at least 48 hours exclusive of Saturdays, Sundays, and legal Holidays in advance of the start of such operation in accordance with Chapter 82, Section 40, of the General Laws, as amended, and the Contractor shall at the same time file a copy of said notice with the Town.

C. When necessary, the Contractor shall cooperate with representatives of public service companies in order to avoid damage to their structures by furnishing and erecting suitable supports, props, shoring or other means of protection. Fire hydrants adjacent to the work at all time, shall be readily accessible to fire apparatus and no materials or other obstructions shall be placed within a radius of 10 feet of a fire hydrant.

D. The Contractor shall contact Dig-Safe call center at (811) before commencing any sub-surface excavation work or operations.

E. Although the Drawings may indicate the approximate location of existing utilities in the vicinity of the work, the accuracy and completeness of the information is not guaranteed by the Town. Before commencing any work, or operations that may endanger or damage any subsurface structures, the Contractor shall carefully locate all such structures and conduct his operations in such a manner as to avoid damage thereto. He shall not interrupt live services until new services have been provided. All abandoned services shall be plugged or otherwise made secure.

F. If the Contractor wishes to have any utilities temporarily relocated for his convenience, other than those specified by the Town, he shall make the necessary arrangements with the owners and make reimbursement for the cost thereof at his own expense.

G. Land monuments and property markers shall be carefully protected and if necessary to remove the same, the Contractor shall do so only at the Town's direction and after an authorized agent witnessed or otherwise referenced their location.

H. The Contractor shall not injure or remove any trees or shrubs without proper authority. Insofar as possible the Contractor shall confine his movements and operations to the area within the limits of location and the area outside the scope of work shall not be disturbed.

I. Disturbance or damage to any above- or below-ground structure, conduits, cables, or the like, caused by any act of omission, neglect or misconduct in the execution or non-execution of work thereof by the Contractor shall be repaired, and/or replaced by the Contractor to the satisfaction of the Town and at no additional expense to the Town.

J. Disturbance or damage to any structure shall be replaced or repaired by the Contractor to the satisfaction of the Town and at no additional expense to the Town.

K. The Contractor shall receive no extra compensation for protection and restoration of property unless said compensation is authorized in writing.

1.23 Cleanup and Restoration

A. After all construction operations are completed, the Contractor shall clean his area of operations of all boulders, stumps and debris and shall leave the area in clean and orderly condition. Any areas within or outside the limits of work, whether regarded or not, which have become scarred, rutted or eroded, due to conditions arising form work performed under this Contract, shall be restored to their natural condition by filling and/or topsoiling, seeding or woodchip mulching as required by the Town.

B. The Contractor shall clean up all project work areas to permit the Town to move in and occupy without any additional cleaning.

C. The costs of the above paragraphs shall be included in the Contract prices and no direct or separate payment will be made to the Contractor.

1.24 Environmental Protection

A. General

1. The Town shall secure the required environmental permits required under M.G.L. Chapter 131, 91 and those issued by the Army Corps of Engineers under Sections 404 and 10. The Contractor is obligated to conform to all requirements of the permits and subsequent requirements issued by governing agencies.

2. Contracts operating under DEP permit shall post a sign for each project site/file number in a format consistent with that enclosed herein. (See next page.)

B. Prevention of Water Pollution

1. The Contractor shall take such precautions in the conduct of this operation as may be necessary to avoid contaminating water in adjacent watercourses or watercourse areas whether natural or man-made. All earthwork, moving of equipment, water control for excavation or foundation areas, and other operations likely to create silting shall be conducted so as to avoid pollution of watercourses of water storage areas.

2. Erosion Control: Such methods as may be necessary shall be utilized to efficiently prevent erosion and sediment from entering nearby waterways, including but not limited to the following:

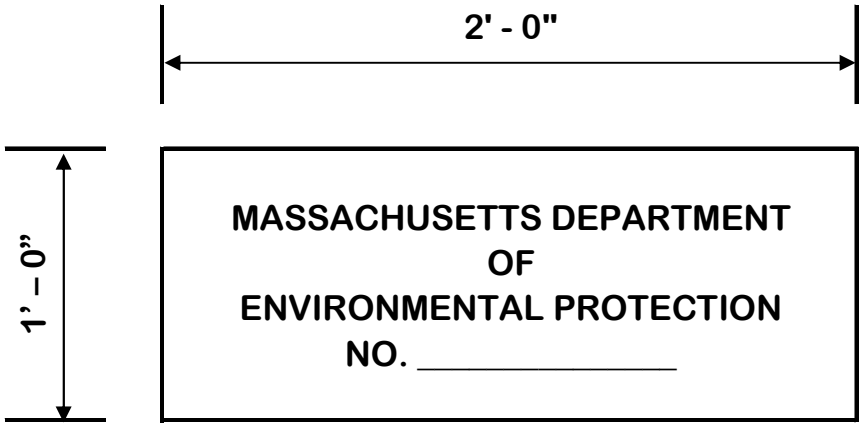

NOTES:

1. CONTRACTOR IS TO SUBMIT LETTER SIZE AND SPACING FOR THE COMPLETION OF THIS SIGN ACCORDING TO THE SKETCH GIVEN.

2. SIGN PLATE SHALL BE ¾" PLYWOOD (MARINE GRADE).

3. THE LOCATION AND METHOD OF INSTALLATION OF THE DEP SIGNS SHALL BE DETERMINED BY THE ENGINEER.

3. Control of Surface Water Runoff: The rate of runoff from the construction site shall be kept at a minimum and controlled. This includes construction of diversion ditches, trenches and berms to retard and direct runoff to protect watercourses.

4. The Contractor shall construct silt retention basins in areas of work adjacent to streams, or rivers, as directed by the Town. These basins shall be removed upon completion of the work. Water used during the contract work that has become contaminated with oil, bitumen, harmful or objectionable chemicals, sewage or other pollutants shall be discharged so as to avoid affecting nearby waters.

5. Under no circumstances shall the Contractor discharge pollutants into any watercourse or water storage area. When water from adjacent natural sources is used in the contract work, intake methods shall be such as to avoid contaminating the source of supply.

C. Protection of Land Resources

1. General

Land resources within the project boundaries and outside the limits of the work as may be affected under the work of this Contract shall be preserved in their present condition that will appear to be natural. The Contractor shall confine his construction activities to areas defined by the Drawings and Specifications.

2. Prevention of Landscape Defacement

Do not deface, injure, or destroy any trees or shrubs, do not remove or cut them without special authority. No ropes, cables, or guys shall be fastened to or attached to any existing nearby tree for anchorage unless specifically approved. Where such special emergency use is permitted, adequately wrap the tree with burlap or rags over which softwood slates shall be tied. The Contractor shall be responsible for any damage resulting from such use. Where trees may possibly be deface, bruised, injured, or otherwise damaged by equipment, dumping, or other operations, protect such trees by placing

boards, planks or approved protective fencing around them. Monuments and markers shall be protected similarly before beginning operations near them.

D. Restoration of Landscape Damage

Any trees or other landscape scarred or damaged by equipment or operations shall be restored as nearly as possible to the original condition, as approved. All trimming or pruning shall be performed in an appropriate manner by licensed arborist with saws or pruning shears. Trimming with axes will not be permitted.

E. Plant Pest Control

All soil moving equipment that has operated in or will operate in regulated areas shall be subject to plant quarantine regulations. In general, these regulations require the thorough cleaning of soil from equipment before such equipment is moved from regulated areas.

F. Noise Control

The Contractor shall use every effort and ever means possible to minimize noises caused by his operations, which the Town may consider as objectionable. Each Contractor shall provide working machinery and equipment designed to operate with least possible noise, and when gearing is used, such gearing shall be of a type designed to reduce noise to a minimum. Compressors shall be equipped with silencers on intake lines. All gas or oil operated equipment shall be equipped with silencers or mufflers on intake and exhaust lines. Whenever practicable, electricity shall be used for power to reduce noise. Dumping bins, hoppers and trucks used for disposal of excavated materials shall be lined with wood or other sound-deadening material if required. Where required by agencies having jurisdiction, certain noise-producing work may have to be performed during specific periods only.

G. Air Pollution Control

The Contractor shall conduct his operations so as not to violate any state and local ordinances pertaining to air pollution.

H. Dust Control

The Contractor is placed on notice that blowing dust from unstabilized earth areas of the work will be considered a nuisance under his control. He shall, by spraying with water or other approved means, dampen the soil to hold down the dust. The use of calcium chloride as a wetting agent will not be permitted. During working hours and before leaving the work for the evening, for weekends, or for a more extended period, the Contractor shall assess the moisture content of the soil and dampen it to the extent necessary to hold down the dust. While work is suspended he shall return to work, if so directed by the Town, to maintain the dust control.

1.25 Use of Explosives

The use of explosives will not be permitted in the work of this Contract, unless specifically specified in the technical Specifications and/or Drawings or approved by the Town in writing.

1.26 Measurement

A. The method of measurement is set forth at the end of each Section of these Specifications.

B. All measurements shall be confirmed by the Town as they are made.

C. The quantities of the various work performed shall be determined for purposes of the certifications of work that are generally required by law and as specified below.

1. Upon completion of the work and before final payment is made the Town will make final measurements to determine the quantities of the various items of work performed, as basis for the final settlement. All measurements shall be made according to the United State's Units of Measurement.

2. The method of measurement and computations to be used in determination of quantities of materials furnished and of work performed under the Contract shall be selected by the Town.

3. Unless otherwise specified, longitudinal measurements for area computations will be made horizontally. Unless otherwise specified transverse measures for area computations will be the dimension shown on the Drawings or in writing by the Town.

4. Structures will be measured according to neat lines shown on the Drawings or as altered to fit field conditions.

5. All items are measured by the linear foot, such as pipe, culverts, guardrail, curbing, etc. will be measured parallel to the base or foundation upon which such structures are placed, unless otherwise shown on the Drawings.

6. In computing volumes the average end area method or other method acceptable to the Town will be used.

7. A sworn weigher shall weigh all materials required to be weighed. The weighing of such materials may be witnessed by the Town.

8. If materials are shipped by rail or trucks, the car weights or quarry weights may be accepted. Weight slips shall be provided for each shipment of material weighed. Each weight slip shall be signed by the sworn weigher. The weight slips shall be countersigned on delivery by the Town and any weight slip not countersigned shall not be included for payment under this Contract.

9. When requested by the Contractor and approved by the Town in writing, material specified to be measured by cubic yard may be weighed and such weights will be converted to cubic yards for payment purposes. Factors for conversion from weight measurements to volume measurements will be determined by the Town and shall be agreed to by the Contractor before such method of measurement of pay quantity is used.

10. The term "lump sum" when used, as a unit of payment will mean complete payment for the work described in the Contract and shall include all material and labor specified.

11. When standard manufactured items are specified such as fence, wire, plates, rolled shapes, pipe conduits, etc. and these items are identified by gage, unit weight, section dimensions, etc., such identification will be considered to be nominal weight or dimensions. Unless more stringently controlled by tolerances in cited Specifications manufacturing tolerances, established by the industries involved will be accepted.

END OF SECTION

SECTION 00850

Incorporation of Applicable Provisions of the
Massachusetts General Laws

Certain provisions of the Massachusetts General Laws are applicable to Construction contracts including, but not limited to, those contained in Chapter 30 and Chapter 149. All applicable provisions of the Massachusetts General Laws are incorporated into the Contract as if fully set forth herein, and shall prevail over any conflicting provisions of the General or Supplemental Conditions.

TECHNICAL SPECIFICATIONS

Section 01000	General Requirements
Section 02002	Mobilization and Demobilization
Section 02003	Demolition and Removal
Section 02110	Steel Sheetpile Cofferdam
Section 02300	Scour Protection
Section 02606	Timber Piles
Section 03300	Marine Concrete
Section 03310	Pre-Cast Concrete Planks
Section 05000	Miscellaneous Metals
Section 06130	Heavy Timber Framing

SECTION 01000
GENERAL REQUIREMENTS

PART 1 GENERAL

1.01 SCOPE OF WORK

A. Work under this Contract consists of the furnishing of all plant, labor, equipment, hardware and materials, for the Boat Ramp Improvement Project at the Children's Beach Boat Ramp at 15 Harbor View Way in Nantucket, Massachusetts, complete in strict accordance with the Specifications and accompanying Drawings and subject to all terms and conditions of the Contract. Payment for materials and labor indicated herein shall be under other items specified in the Contract.

1.02 DESCRIPTION

A. The work to be completed for the Children's Beach Boat Ramp Improvement Project shall include but is not limited to the following:

1. Installation and maintenance of siltation boom.
2. Design and installation of a temporary steel sheetpile cofferdam with de-watering into a non-siltation producing containment system.
3. Installation of a temporary access ramp for launching of boats during construction. Access ramp shall be placed on Children's Beach adjacent to the existing boat ramp.
4. Removal of concrete edge fill.
5. Removal, stockpiling, and repairs to the existing pre-cast concrete planks.
6. Re-grading existing crushed stone base and placing additional crushed stone base material, as necessary.
7. Re-setting of existing pre-cast concrete planks.
8. Installation of new concrete edge fill.
9. Supply and installation of new pre-cast concrete planks, to match existing.
10. Supply and installation of stone-filled gabion mattresses for scour protection.
11. Driving of 4 additional timber piles and associated timber framing and decking to extend the south pier approximately 12 linear feet.
12. Timber fendering installation on piers.

1.03 CONTRACTOR USE OF SITE AND DELIVERY

A. Site usage at the Children's Beach Boat Ramp by the Contractor is limited to that area as necessary to perform construction work. The Contractor shall coordinate site access and staging area with the Town and Harbormaster.

B. The Contractor shall repair, at its own expense, any damage caused to the public or private property; remove from the site all debris, excess materials, tools, and

equipment; and shall leave the premises in a neat and orderly condition, to the satisfaction of the Engineer and Owner.

C. Comply with navigational laws, United States Coast Guard (USCG) Rules and Regulations, and local, state and federal regulatory agencies, as required.

1.04 CONSTRUCTION SCHEDULES AND COORDINATION

A. The Contractor shall coordinate shop drawings and schedules with the Engineer and the Town.

B. The Contractor shall be required to coordinate delivery of materials under this contract with the Town and the Engineer. Contractor shall be required to provide periodic schedule updates for coordinating deliveries.

C. Unless otherwise specified, within seven (7) calendar days from the Notice to Proceed the Contractor shall submit to the Town and Engineer a schedule of construction tasks. All entries contained in unit price schedule shall be included. Each entry shall show an intended start and completion date using a horizontal bargraph method.

D. Should Contractor find that they cannot maintain schedule as originally intended, Contractor shall immediately submit a revised schedule without being requested to do so by the Town or Engineer.

E. The Construction schedule shall be maintained on the project for review during site meetings. If a major change is made to the schedule, three (3) copies of the updated schedule shall be submitted to the Engineer immediately.

F. Contractor's hours of operation shall be limited to 7:00 AM to 7:00 PM, Monday through Friday, unless otherwise agreed in writing by the Town or Engineer.

G. Contractor shall also provide a complete breakdown of all items that shall be paid for under this Contract. This breakdown shall show all relative costs to the item as bid, such as the costs of material, labor, delivery, inspection, and all incidentals to the item.

1.05 DATUM

A. Vertical datum used for this project is Mean Low Water (MLW).

B. Bidders are advised to consult the Tide Tables issued by National Oceanic and Atmospheric Administration (NOAA) in order to evaluate tidal conditions affecting work.

1.06 INSPECTIONS

A. The Owner will assign an inspector to this project on a part time basis, as required to cover the work under this Contract. The Inspector, Resident Engineer, or Engineer shall be the Owner's Representative for this project.

B. All materials or equipment that are not suitable for use on this project and/or have been rejected by the Engineer shall be removed from the site immediately; the cost of the removal of these materials shall be the responsibility of the Contractor.

C. The Engineer shall be permitted at all times to inspect the work and check the lines, grades, elevations, reference marks, etc., set by the Contractor. Any errors or discrepancies in these items discovered by checks shall be corrected by the Contractor. Such checks shall not be construed to be an approval of the Contractor's work and shall not relieve or diminish in any way the responsibilities of the Contractor for the accurate and satisfactory completion of the entire work. The Contractor shall be available to assist the Engineer with these checks as needed.

1.07 DOCUMENTS REQUIRED AND PHOTOGRAPHS

A. Maintain at job site, one copy each of following:

1. Contract Drawings
2. Specifications
3. Addenda
4. Reviewed shop Drawings
5. Change orders
6. Other modifications to Contract
7. Field test reports
8. Copy of approved work schedule.
9. Regulatory approvals and requirements.

B. Photographs

1. The Contractor shall, at its own expense, furnish the Town with digital photographs of the project. Photographs will be scheduled at low tide to reveal as many site features as possible. The photographs shall be taken with digital camera and electronic files of each view shall be furnished to the Engineer by the Contractor.

2. A minimum of twenty-four (24) views will be required and shall be taken at each location as follows:

   a. Before the project has started
   b. Every 2 weeks of construction activity
   c. After the project is completed

1.08 SUBMITTALS

A. Shop Drawings

1. The Contractor shall submit three copies of all shop or setting drawings, schedules and catalog cuts, for approval. All data submitted to the Town shall be rechecked and verified by the Contractor.

2. The Contractor will also submit to the Town for approval, with such promptness as to cause no delay in the work, all samples required by the Contract. All samples will have been checked and approved by the Contractor, identified clearly as to material, manufacturer, and pertinent catalog numbers and the use for which intended.

3. At the time of each submission, the Contractor shall call the Town's attention, in writing, any deviations that the shop drawings or samples may have from the requirements of the Contract.

4. The Town will check and approve with reasonable promptness shop drawings and samples, but the checking and approval shall be only for conformance with the design concept of the project and for compliance given in the Contract. The Contractor will make any corrections required by the Town and return six copies of corrected shop drawings or resubmit new samples. The approval of a separate item as such will indicate approval of the assembly in which the item functions.

5. Work requiring a shop drawing or sample submission shall not proceed until the submission has been approved by the Town.

6. The Town's approval of shop drawings or samples shall not relieve the Contractor from his responsibility for any deviations from the requirements of the Contract unless the Contractor has in writing called the Town’s attention to such deviations at the time of submission and the Town has given written approval to the specific deviation, nor shall it relieve the Contractor from errors or omissions in the shop drawings.

1.09 QUALITY CONTROL AND WORKMANSHIP

A. Maintain quality control, equipment, services, site conditions, and workmanship, to produce work of specified quality.

B. Contractor shall comply with industry standards except when tolerances that are more restrictive or specified requirements indicate more rigid standards or more precise workmanship.

C. Perform work by persons qualified to produce workmanship of specified quality.

1.10 FABRICATION

A. Piling and other construction materials shall be fabricated in accordance with the specifications and as indicated by the Drawings.

B. The Contractor shall make, check and be responsible for all measurements and dimensions necessary for proper construction.

1.11 CONSTRUCTION FACILITIES

A. Provide and maintain temporary sanitary facilities for construction personnel.

B. Contractor shall provide on-site phone service, or other telephone facilities such that the Contractor can be reached at any time throughout the work day.

C. Contractor shall provide phone numbers for communication and emergency contact during off work hours.

1.12 PERMITS AND MITIGATION MEASURE

A. Attention is directed to the Environmental permits relating to this Contract. All stipulations of these documents shall be adhered to at all times throughout the duration of this contract, at no additional cost to the Owner. Regulatory approval requirements are included within the Sections describing work elements.

B. The Town of Nantucket will be responsible for the building permit, if required.

C. The Contractor shall comply with all applicable local, state and federal requirements, as well as standard industry standards and practices regarding materials, methods of work and disposal of excess and waste materials.

D. Contractor shall provide DEP Wetland project signs in conformance with Standard Order of Conditions, which shall be made available prior to the award of Contract.

1.13 SURVEY CONTROL

A. Locate, protect and maintain bench marks, monuments, control points and project engineering reference points.

B. The Contractor shall provide, at its own expense, all materials and labor as may be required to establish and maintain all project control range lines, additional reference marks and line and grade stakes. If the Contractor, through willfulness or carelessness, removes or permits the removal of such reference marks before prosecution of the work requires it, they shall be replaced at the Contractor's own expense.

C. All work shall conform during its progress and on its completion truly to the lines and grades given by the Contract Documents. The work shall be done in a thoroughly substantial and workmanlike manner, in accordance with the contract Drawings, these specifications, and as directed by the Engineer.

D. The Contractor shall make, check and be responsible for all measurements and dimensions necessary for proper construction.

1.14 SUBSURFACE INVESTIGATIONS

A. No subsurface investigations have been performed at the Project Site. Contractor is responsible for subsurface investigations at the Project Site.

B. Subsurface investigation data from the adjacent Nantucket Yacht Club Bulkhead Rehabilitation Project has been provided in Attachment C FOR REFERENCE ONLY. The Nantucket Yacht Club is approximately 400 to 500 feet to the south of the Children's Beach Boat Ramp Site.

1.15 RECORD DRAWINGS

Contractor shall provide the Town and Engineer with two copies of complete As-Built Drawings at the completion of the work. Record drawings will indicate exact locations and dimensions of all work performed.

PART 2 PRODUCTS

Not Used

PART 3 EXECUTION

Not Used

PART 4 METHOD OF MEASUREMENT AND PAYMENT

There will be no separate measurement of quantities or payments for work covered by this Section.

END OF SECTION

SECTION 02002
MOBILIZATION AND DEMOBILIZATION

PART 1 GENERAL

1.01 WORK INCLUDED

This item shall consist of preparatory work and operations, including but not limited to those necessary for the movement of personnel, equipment, materials, supplies, and incidentals to the project site, including access, restoration of site and adjacent properties affected by Contractor operations and for the establishment of the Contractor's supervisory facilities necessary for work on the project and all other work and operations which must be performed or for costs which must be incurred prior to beginning work. Access, temporary construction facilities, and submittal items shall be in accordance with the requirements of the applicable sections of the Contract.

This item shall also consist of the supply, installation, maintenance and removal of the temporary access ramp as indicated on the Contract Drawings. Temporary access ramp shall be installed to allow continued use of the site for launch and retrieval of boats for the duration of the construction project.

1.02 RELATED SECTIONS

01000	GENERAL REQUIREMENTS
02003	DEMOLITION AND REMOVAL
02110	STEEL SHEETPILE COFFERDAM
02300	SCOUR PROTECTION
02606	TIMBER PILES
03300	MARINE CONCRETE
03310	PRE-CAST CONCRETE PLANKS
05000	MISCELLANEOUS METALS
06130	HEAVY TIMBER FRAMING

PART 2 PRODUCTS

Products will be as required and as specified in other sections.

2.01 TEMPORARY ACCESS RAMP

A. Temporary access ramp shall be Mobimat or approved equal.

PART 3 EXECUTION

3.01 SUBMITTALS

A. Temporary Access Ramp: Submit manufacturer's product data and installation procedure data and recommendations for the proposed temporary access ramp.

B. Submittals for other work shall be in accordance with Section 01000 and the Specific Section requirements.

C. Contractor shall submit letter indicating that all work has been completed per the project requirements and requesting that the Engineer perform a final inspection of all work prior to Contractor demobilization.

3.02 SITE PREPARATION AND RESTORATION

A. Contractor shall provide site access as required for the transport of materials, personnel and equipment to the project site.

B. Contractor to provide, install and maintain temporary fencing around the construction area as shown on the Contract Drawings, or as directed by the Town or Engineer.

C. Contractor to provide measures to protect the public and close off specific work areas when working on the Project.

D. Contractor shall remove all materials used for access and restore all areas to their pre-construction condition.

E. Excess material shall be removed from the site and become the property of the Contractor unless otherwise noted or directed.

F. Contractor shall restore the beach site at the temporary access ramp location and restore landside timber wall to original condition as indicated on the Contract Drawings.

3.03 TEMPORARY ACCESS RAMP

A. Contractor shall provide, install and maintain a temporary access ramp adjacent to the site at Children's Beach for use as a boat launch and retrieval site.

B. Contractor to maintain temporary access ramp until completion and acceptance of the boat ramp improvement project.

C. Upon acceptance, Contractor to remove temporary access ramp and restore the

beach area to pre-construction conditions.

PART 4 MEASUREMENT AND PAYMENT

4.01 MEASUREMENT

A. MOBILIZATION AND DEMOBILIZATION shall be measured as a lump sum with the percentage of mobilization and demobilization complete measured by the Engineer, as indicated on the bid form. Total payment under this item shall be less than 15 percent of the total contract amount bid.

B. Following completion of 40 percent of the work under the Contract, the Contractor may invoice 65 percent of this item. Following completion of all work under this item, the Contractor may invoice the remaining 35 percent of this item.

C. TEMPORARY ACCESS RAMP shall be measured as a lump sum amount and shall include supply, installation and removal of a temporary access ramp to be used during construction at the location indicated on the Contract Drawings.

4.02 PAYMENT

A. MOBILIZATION AND DEMOBILIZATION shall be paid for under Contract Item 02002-1. Payment for work shall be per the percentage of mobilization and demobilization complete, which price shall include all material, equipment including labor, transportation submittals, restoration of site, and other incidental or appurtenant work required to complete mobilization and demobilization as indicated on the Contract Drawings, as specified herein, and as directed by the Engineer.

B. TEMPORARY ACCESS RAMP shall be paid for under Contract Item 02002-2. Payment for work shall be per the lump sum price and shall include full compensation for furnishing, installation and removal of the temporary access ramp including fastening, bracing, survey, supervision, and all other material, equipment, labor and incidental or appurtenant work required to install the temporary access ramp within the limits of work as indicated on the Contract Drawings, as specified herein, and as directed by the Engineer.

C. Payment Items

ITEM	DESCRIPTION	UNIT PRICE
02002-1	MOBILIZATION AND DEMOBILIZATION	Lump Sum
02002-2	TEMPORARY ACCESS RAMP	Lump Sum

END OF SECTION

SECTION 02003
DEMOLITION AND REMOVAL

PART 1 GENERAL

1.01 SCOPE

A. The Contractor shall furnish all labor, materials, equipment and services necessary for and incidental to the execution and completion of all demolition operations as shown on the Drawings and as required to complete the project.

B. The work under this Section shall include, but is not limited to, demolition and legal disposal of the following items;

1. Items used in original boat ramp construction not suitable or intended for reuse including, soil, timber, concrete fill and other construction related materials.

2. The deteriorated and damaged portions of the existing boat ramp and base material.

C. All demolition shall be accomplished in a neat, workmanlike manner, and at such time or times as is most suitable to the progress and proper coordination of the project.

D. All interfaces between areas of demolition and areas designated to remain shall be sawcut to provide a straight, neat interface. Any edges damaged during construction shall be recut by the Contractor at their own expense.

1.02 SUBMITTALS

A. Schedule of work.
B. Siltation/Trash boom specifications.
C. Disposal location and route.

PART 2 MATERIAL

2.01 SILTATION BOOM AND SILTATION CONTROL

A. The siltation boom shall consist of polyethylene floatation devices with a permanently attached fabric curtain, weighted at the bottom. The curtain material shall be woven polypropylene with a 200 pound minimum tensile strength. Boom to be utilized prior, during and after the installation of the steel sheepile cofferdam.

B. Work performed under this Contract shall be completed within the confines of the temporary steel sheetpile cofferdam. Steel sheetpile cofferdam shall be installed in accordance with regulatory approvals for the construction work, and in accordance with Specification Section 02110.

PART 3 EXECUTION

3.01 PROTECTION OF EXISTING STRUCTURES AND UTILITIES

A. The Contractor shall take all necessary precautions to ensure that existing facilities, structures and equipment within and adjacent to the site, and indicated to remain, are not damaged and remain operational during the demolition work.

B. Existing utility systems adjacent to the site shall remain and shall be protected from damage during construction. Where interruption of a service is required, it shall be scheduled in advance and coordination with the Owner.

C. The Contractor shall provide trash booms to contain any debris which may fall into the Harbor.

D. The Contractor shall follow procedures outlined in Conservation Commission Order of Conditions, and all other local, state and federal agency requirements.

E. Work or features scheduled to remain that are damaged by the Contractor shall be restored at its own expense to the satisfaction of the Owner.

3.02 DEMOLITION AND DISPOSAL OF MATERIAL

A. All material resulting from demolition shall become the property of the Contractor except if indicated otherwise, and shall be properly and legally disposed of at the Contractor's own expense, as demolition progresses.

B. The Contractor shall assure that all wastes generated by construction activities are appropriately stored and removed in a timely manner.

C. Disposal methods shall be in accordance with all federal, state and local requirements, as well as being acceptable to the Owner and to the Engineer.

3.03 DEMOLITION AND REMOVAL OF EXISTING MEMBERS

A. The Contractor shall remove all existing items designated for removal in their entirety, or to lines and grades shown on the Drawings or as specified herein.

B. Items designated to be salvaged and re-used shall be removed and stored in a careful manner so as not to damage any items. Any material mishandled or damaged in any way shall be replaced at the contractor's expense.

PART 4 MEASUREMENT AND PAYMENT

4.01 MEASUREMENT

A. Demolition shall be measured as the percentage of demolition complete as measured by the Engineer.

B. Total payment under this item shall be less than 15 percent of the total contract amount.

4.02 PAYMENT

A. Demolition for the work shall be paid for under Contract Item 02003-1 for the percentage of demolition complete, which price shall include full compensation for demolition work including all material, equipment, labor, survey, supervision, transportation, excavated material disposal, and other incidental or appurtenant work required to complete demolition work as indicated by the Drawings, as specified herein, and as directed by the Engineer.

B. Payment Items

ITEM	DESCRIPTION	UNIT PRICE
02003-1	DEMOLITION AND REMOVAL	Lump Sum

END OF SECTION

SECTION 02110
STEEL SHEETPILE COFFERDAM

PART 1 – GENERAL

1.01 GENERAL CONDITIONS

A. Attention is directed to the requirements of the General Conditions and Supplemental Conditions of which this Section is hereby made part of.

1.02 PERMITS

A. Attention is directed to the Environmental permits and/or Licenses attached to this Contract. All stipulations of these documents shall be adhered to at all times throughout the duration of this Contract. Environmental permits and/or Licenses are hereby made part of this Contract.

B. The Contractor shall comply with all applicable local, state and federal requirements, as well as standard industry standards and practices, regarding materials, methods of work and disposal of excess and waste materials.

1.03 SUBSURFACE INVESTIGATIONS

A. No subsurface investigations have been performed at the Project Site.

B. Upon notification to the Owner, the Contractor will be allowed the right to make any subsurface explorations they deem necessary to satisfy themselves of the existing ground conditions.

C. Subsurface investigation data from the Nantucket Yacht Club Bulkhead Rehabilitation Project has been provided in Attachment C FOR REFERENCE ONLY. The Nantucket Yacht Club is approximately 400 to 500 feet to the south of the Children's Beach Boat Ramp Site.

1.04 SCOPE OF WORK

A. The work under this item includes, but is not limited to; design, furnishing and installing the temporary steel sheet pile cofferdam for the repairs and reconstruction of the pre-cast concrete plank boat ramp at the Children's Beach Boat Ramp project site, and the dewatering of the work area. The work shall consist of the design, furnishing and placing steel sheeting, temporary walers, braces, coffers, dewatering, and all ancillary work that will be required to construct the coffered structure to the limits as indicated on the Contract

Drawings, and for the dewatering of the work area. Water removed from the work area shall be pumped from the work area into a filter box to reduce and minimize suspended solids prior to discharge into the harbor.

1.05 TECHNICAL SPECIFICATIONS/PUBLICATIONS

A. Comply with all applicable requirements of the Commonwealth of Massachusetts, Department of Transportation, Standard Specifications for Highways and Bridges, dated 1988 and all amendments (Standard Specifications).

B. American Institute of Steel Construction (AISC), Specification for the Design, Fabrication and Erection of Structural Steel for Buildings, latest edition.

C. Steel Structures Painting Manual: Surface Preparations Specifications (SSPC).Commercial Blast Cleaning, SSPC-SP-6-63.

1.06 RELATED WORK IN OTHER SECTIONS

02002	MOBILIZATION AND DEMOBILIZATION
02300	SCOUR PROTECTION
03300	MARINE CONCRETE
03310	PRE-CAST CONCRETE PLANKS

PART 2 - PRODUCTS

2.01 GENERAL

A. Materials shall be as selected by the Contractor and approved by the Town, except as indicated on the Contract Drawings and/or in the Specifications.

PART 3 - EXECUTION

3.01 GENERAL

A. The Contractor shall furnish and install steel sheeting for the construction of a cofferdam to control water and prevent erosion during the construction of the boat ramp at the Children's Beach site. The work shall consist of furnishing and placing steel sheeting, temporary, walers, braces, coffers, dewatering, and all ancillary work that will be required to construct the coffered structure.

B. Prior to commencing any work, the Contractor shall submit shop drawings and engineering plans showing the cofferdam and sheeting design requirements. Shop drawings and the engineering plans shall be prepared by a Registered Professional Engineer, licensed to practice in the State of Massachusetts and shall bear the Engineer's seal. Shop drawings shall be submitted to the Engineer for review prior to commencement of work.

C. Cofferdam design submittal shall include a construction schedule indicating the cofferdam installation and removal sequence. Submittal shall identify the need for phased excavations or special shoring to maintain stability throughout the installation of the bulkhead structure.

D. Materials shall meet the minimum requirements of standard engineering practice for the construction of temporary cofferdam structures. Materials used to steel sheeting shall meet the requirements specified in the Massachusetts Standard Specifications. The Contractor is responsible for modifying and submitting revised construction details if the Contractor utilizes different sheeting types.

E. All equipment (pumps etc.) soil tests, borings, materials labor necessary for the proper design, construction and water control shall be the responsibility of the Contractor and the cost shall be included under this item.

F. Work shall not be started until all approvals are obtained and until all materials and equipment necessary for the construction of the cofferdam are on site.

G. Sufficient labor and equipment shall be employed to insure the completion of the coffered structure. The sheeting shall be securely and satisfactorily braced to withstand all pressures to which it may be subjected and shall be sufficiently tight to prevent any flow of water or material into the space where concrete is to be deposited. The sheeting shall be driven to sufficient depth to safely resist all imposed earth and hydrostatic loads.

H. Jetting of sheeting is prohibited. No sheeting may be left so as to create a possible hazard to navigation, safety of the public, obstruction of water flow, or hindrance to traffic of any kind.

I. The work under this section shall conform to the relevant provisions of Section 140.60, Cofferdam of the Standard Specifications except as herein specified.

J. Use driving methods which will not cause damage to nearby structures, adjacent stone seawalls or to sheet pile being driven.

K. Verify that site conditions will support driving equipment to provide adequate performance for the duration of sheet pile driving operations.

3.02 SUBMITTALS, SAMPLES AND INSPECTIONS

A. Submittals

1. The Contractor shall submit shop drawings showing sheeting layout, connections, welding, and materials. Drawings shall be stamped by a Massachusetts Registered Professional Engineer.

2. The Contractor shall submit a description of the method and equipment to be used, for approval by the Engineer, before any work shall proceed. Manufacturer's specifications of products and maintenance manuals for the pile hammer and auxiliary equipment.

3. Product Data: Submit the following:
Certification that the steel sheet piling conform to the material specifications. Conformation to ASTM A328 as herein modified.

4. Pile Driving Submittals: A complete installation log for pilings within 5 days of installation. Log shall include depth of penetration, pile toe and cutoff elevations, date installed and other pertinent pile installation behavior.

3.03 INSTALLATION OF PILING

A. Sheet Pile Installation Equipment:

1. Steel sheeting will be driven by approved vibratory or impact hammer.

2. The Contractor shall provide and maintain, in good operating condition, all equipment complete with supplemental equipment (hydraulic systems, hose, adapters, etc.) as recommended by the hammer manufacturer, as necessary for proper and efficient handling and installation of sheet piles.

3. Contractor shall maintain equipment in good condition and capable of continuous operation of the pile hammer at full rated speed and remove any equipment failing to meet these requirements, as determined by the Engineer, and replace with equipment acceptable to the Engineer.

4. The Contractor is responsible for providing a hammer capable of driving sheets to the indicated tip elevation. The Engineer may require change in hammer if installation is not achieving proper depth, at no additional cost to the Owner.

B. Driving and Installation:

1. Contractor shall perform demolition and prepare area to the approval of the Engineer prior to driving sheeting. Contractor shall maintain alignment as indicated by the Drawings.

2. Sheet pile shall be lifted and handled in such a manner that maximum bending stress does not exceed 22,500 psi.

3. Prior to setting, sheet piles shall be clean and inspected for defects and proper interlock dimensions. Each sheet pile shall have sufficient clearance in the interlock to slide under its own weight in the previously placed sheet pile. All sheet pile interlocks shall be gauged to verify that the thumbs of the interlocks are of the proper size to fit the corresponding interlock opening.

4. Deliver hammer blows on central axis of sheet piles.

5. Protect sheet pile head during driving. Provide full bearing on piles for distribution of hammer blow. Do not damage sheet piles during driving operations.

6. Sheet piles shall be driven in pairs in a stepped fashion to minimize adjacent sheets from jumping interlock connections.

7. Drive sheet piles to toe elevations as shown on the Drawings and as directed by the Engineer. Sheet piles that are raised during driving of adjacent sheet piles shall be re-driven as required by the Engineer.

3.04 DAMAGED AND MISPLACED SHEET PILES

A. Remove and replace any sheet pile that is kinked, bent, or damaged because of internal defects or by improper handling or installation, or that is impaired for its intended use.

B. All work of removal and cost of replacement, including sheet pile material costs, shall be borne by the Contractor, at the Contractor's sole expense.

PART 4 - MEASUREMENT AND PAYMENT

4.01 MEASUREMENT AND PAYMENT

A. Measurement for payment for cofferdam installation shall be under Item 02110-1, STEEL SHEETPILE COFFERDAM, which price shall include full compensation for temporary cofferdam, engineering design and shop drawings, water control, removal of cofferdam, restoration, soil tests, all labor, supervision, survey, materials, tools, water control, equipment, transportation, installation, and all incidental work necessary to complete the work under this item.

4.02 PAYMENT ITEMS

ITEM	DESCRIPTION	UNIT PRICE
02110-1	STEEL SHEETPILE COFFERDAM	Lump Sum

END OF SECTION

SECTION 02300
SCOUR PROTECTION

PART 1 - GENERAL

1.01 WORK INCLUDED

A. This work shall consist of furnishing and placing the necessary material and equipment to install stone-filled gabion edge scour protection along the edges of the proposed boat ramp as indicated on the Contract Drawings. The work to include, but not limited to, supply and installation of stone-filled gabion mattresses, supply and installation of stone fill, removal and replacement of sediment along edge of ramp to bury scour protection in accordance with these Specifications and in close conformity with the lines, grades and elevations shown on the Drawings or established by the Engineer.

1.02 REFERENCES

A. The Commonwealth of Massachusetts DPW Standard Specifications for Highways and Bridges, Latest Edition, and all amendments; which is herein made part of this Contract in its entirety.

1.03 SUBMITTALS

A. Gabion mattress product data
B. Gabion mattress coating or galvanizing product data
C. Samples of stone fill
D. Method of installation

1.04 RELATED WORK

02002	MOBILIZATION AND DEMOBILIZATION
02003	DEMOLITION AND REMOVAL
02110	STEEL SHEETPILE COFFERDAM

PART 2 - PRODUCTS

2.01 GENERAL

A. All materials shall conform to the requirements of the Commonwealth of Massachusetts DPW Standard Specifications for Highways and Bridges, latest edition.

2.02 GABION MATTRESS

A. Gabion mattress shall be constructed of wire having a maximum tensile strength of 75,000 psi (515 MPa), in accordance with ASTM A641/A641M. The elongation of the wire shall not be less than 12%, in accordance with ASTM A370.

B. Gabion Mattresses shall be PVC coated.

C. Gabion mattresses shall be manufactured to be utilized in the marine environment.

D. Gabion Mattresses shall be manufactured with all components mechanically connected at the production facility with the exception of the lid, which is produced separately from the base. The base, sides and ends of the gabion mats shall be woven into a single unit. The diaphragms are connected to the base in the factory. All perimeter edges of the mesh forming the base and lid shall be selvedged with selvedge wire. The gabion mat is divided into cells by means of diaphragms. The diaphragms create cells of 3 ft (1 m) by 9 ft (2.8 m). The diaphragms shall be secured in position of the base so that no additional tying is necessary at the jobsite.

2.03 STONE FILL

A. All rock shall be hard, angular to round, durable and of such quality that they shall not disintegrate on exposure to salt water or weathering during the life of the structure. Also, the size shall be such that a minimum of two layers of rock can be achieved when filling any gabion mat. Any rock smaller than the minimum size cannot be less than 5% by weight; any rock greater than the maximum size cannot be greater than 5% by weight, provided it is not on the exposed surface of the gabion mat.

B. Gabion Mat rock shall be in the full range size of the lower and upper limits of 4 inch to 8 inch.

PART 3 - EXECUTION

3.01 GENERAL

A. Excavate as necessary to place scour protection to the lines and elevations as indicated on the Contract Drawings and as directed by the Town and the Engineer.

B. All existing utilities shall be protected or relocated as directed by the Engineer.

C. All unusable materials including stone, soil and concrete not able to be reused shall be the responsibility of the Contractor and be disposed of properly off-site.

3.02 GABION INSTALLATION

A. Gabion mats are supplied in rolls, the base in one roll and the lid in another. The units shall be assembled individually by erecting the sides, ends and diaphragms ensuring that all panels are in the correct position and the tops of all sides are aligned. The four corners of the unit shall be connected first, followed by the internal diaphragms to the sides. All connections should be accomplished using lacing wire or fasteners.

B. The recommended procedure to apply lacing wire consists of first cutting a sufficient length of wire. Secure one end of the wire by looping and twisting, then proceed to lace with alternating single and double loops every mesh opening (approximately every 4 inches) and securely fasten the other end of the lacing wire.

C. Initial assembly should occur with the gabion mats in their final position. The adjacent empty mats must be securely joined together using the same connecting procedure(s) along the vertical, top and bottom edges of their contact surfaces.

D. Gabion mats shall be filled with rock as specified above. During the filling operation or placement some manual stone is required to minimize voids. Care shall be taken when placing fill material to ensure that the PVC sheathing is not damaged. The cells in any row shall be filled in stages so that local deformation may be avoided. It is also recommended to slightly overfill the baskets 1 to 2 inches to allow for settlement of the rock.

E. Once the mats are completely full, the lids shall be pulled tight using a tool such as a lid closer until the lid meets the perimeter edges of the mattress. The lid shall then be tightly laced and/or fastened along all edges, ends and tops of diaphragms in the same manner.

F. Where shown on the drawings or otherwise directed by the engineer, the gabion mat mesh shall be cut, folded and fastened together to suit existing site conditions. The mesh must be cleanly cut and the surplus mesh folded back and neatly wired to an adjacent gabion mat. The cut edges of the mesh shall be securely fastened together with lacing wire or fasteners in the manner described. Any reshaped gabion mats shall be assembled,

installed, filled and closed as specified in the previous sections.

PART 4 - MEASUREMENT AND PAYMENT

4.01 MEASUREMENT AND PAYMENT

A. Measurement and Payment for the GABION SCOUR PROTECTION shall be paid under Item 02300-1 per square foot, which unit price shall include all materials, supervision, survey, labor and incidentals necessary to complete the work including layout, excavation, preparation, compaction, stone-filled gabion installation, and restoration of area as shown on the Contract Drawings, as herein specified, and as directed.

4.02 PAYMENT ITEM

ITEM	DESCRIPTION	UNIT PRICE
02300-1	STONE GABION SCOUR PROTECTION	Square Foot

END OF SECTION

SECTION 02606
TIMBER PILES

PART 1 - GENERAL

1.01 SCOPE

A. The work under this section includes but is not limited to the supply and installation of timber piles for the proposed timber pier extension as shown on the Contract Drawings, and specified herein.

1.02 SUBMITTALS

A. Certificates of Compliance and product data shall be provided for the following materials specified herein.
   a. Timber pile certificates;
   b. Hardware and galvanization product data;
   c. Pile driving equipment product data.

PART 2 - PRODUCTS

2.01 NEW TIMBER PILES

New timber bearing piles shall be Southern Yellow Pine and conform to the following:

A. Treatment-CCA minimum retention 2.5 PCF.

B. Minimum diameters for pier support piles: 12 inches at 3 feet from butt and 8 inches at the tip.

C. Sealing compound for cut-offs - 2 liberal brush coats of Copper Naphthenate containing a minimum of 2% metallic copper in solution, meeting AWPA Standards 174 and P8.

D. ASTM Standard D25 "Standard Specifications for Round Timber Piles," latest edition.

2.02 HARDWARE

Hardware shall conform to the following requirements:

A. Nuts, Bolts, and Washers ASTM A-307, Grade A.

B. All hardware shall be hot dip galvanized in accordance with ASTM A-123 and A-153. Minimum coverage shall provide 2.0 oz. zinc per square foot.

C. All bolts, washers, nuts, specified in this Section will be of the size shown on the Drawings, or as approved by the Engineer.

PART 3 - EXECUTION

3.01 NEW TIMBER PILES

A. New timber piles to be installed for the timber pier extension where indicated on the Contract Drawings.

B. Provide a pencil point at the tips of all piles, unless otherwise indicated.

C. All piles shall be driven to refusal or to the tip elevation shown on the Contract Drawings, as approved by the Engineer.

D. Contractor shall be responsible for correctly locating new piles to be installed. Piles shall be installed within two (2) inches of the design location. Piles not driven within these limits will not be eligible for payment. Piles may not be pulled into position.

E. Piles shall be cut a minimum of 3 feet from the top after installation and at the elevation indicated on the Drawings. Top of piles shall be brush coated with 2 coats of preservative.

F. Piles shall be installed using an impact or vibratory hammer of sufficient capacity to achieve tip elevations as shown on the Drawings.

G. Pile driving activities shall be performed in accordance with the United States Army Corps of Engineers, Department of the Army General Permits for Massachusetts. Use a soft start each day of pile driving, building up power slowly from a low energy start-up over a period of 20-40 minutes to provide adequate time for fish and marine mammals to leave the vicinity. The buildup of power should occur in uniform stages to provide a constant increase in output. Bubble curtains can be used to reduce sound pressure levels during vibratory or impact hammer pile driving.

H. Contractor shall be responsible for removal of obstructions to a limit of 10 feet below the harbor bottom. Notify Engineer immediately if obstructions are encountered.

I. Contractor shall submit pile log with tip elevations and cutoff lengths for each pile.

PART 4 - MEASUREMENT AND PAYMENT

4.01 MEASUREMENT AND PAYMENT

A. Measurement and payment for timber piles shall be per each, complete in place. Payment for timber piles shall be included under 02606-1 TIMBER PILES, and shall include full compensation for furnishing and installing all timber piles, preservative treatment, fastenings, falsework, and all other materials, equipment, labor, survey, supervision and incidental or appurtenant work required to install timber piles within the limits of work, as shown on the Contract Drawings, as specified herein.

4.02 PAYMENT

A. Payment Items

ITEM	DESCRIPTION	UNIT PRICE
02606-1	TIMBER PILES	EACH

END OF SECTION

SECTION 03300
MARINE CONCRETE

PART 1 - GENERAL

1.01 WORK INCLUDED

A. The Section provides material properties and procedures for the cast-in-place concrete edge fill as indicated on the Drawings and as directed by the Engineer.

B. Work shall include the placement of ancillary items including forming, reinforcing, accessories, placing, curing, and surfacing.

1.02 RELATED SECTIONS

02002	MOBILIZATION AND DEMOBILIZATION
02003	DEMOLITION AND REMOVAL
03310	PRE-CAST CONCRETE PLANKS

1.03 REFERENCES

The latest edition of the following:

A. ACI Standards: SP-15; 211; 301; 304; 305; 306; 309; 311;315; 318

B. ASTM Standards: A185; A615; A706; A767; C31; C33; C39; C94; C143; C150; C231; C260; C443; C478; C494; C989

C. AWS Standards: D1.4

1.04 QUALITY ASSURANCE

A. Perform work in accordance with ACI 301 and ACI 318.

B. Obtain materials from same source throughout the work.

1.05 PRODUCT DATA

A. Submit product data to Engineer for approval.

B. Provide product data for specified products.

C. Submit manufacturers' instructions to Engineer for approval.

D. Submit proposed mix design to the Engineer for review prior to commencement of concreting operations.

PART 2 - PRODUCTS

2.01 CONCRETE MATERIALS

A. Cementitious Material:

1. Portland Cement ASTM C150 Type II.

B. Aggregates:

1. Provide from one source of supply to ensure uniformity in color, size, and shape unless otherwise accepted by the Engineer.

2. Do not use aggregates containing soluble salts or other substances such as iron sulfides, pyrite, marcasite or ochre which can cause stains on exposed concrete surfaces.

3. Fine Aggregate:

a. Optional grading in ASTM C33 shall apply.
b. Restriction on reactive material in ASTM C33 shall apply.
c. Use clean, sharp, natural sand. Do not use dune sand, or manufactured sand from a crushing operation.

4. Coarse Aggregate:

a. Use Size Number 67 for mixes having a maximum coarse aggregate size of 3/4 inch.
b. Class designation is 3S per ASTM C33.
c. Use crushed stone processed from natural rock or stone, or washed gravel - either natural or crushed. Do not use pit or bank run gravel.
d. Maximum aggregate size shall be 3/8 inches.

C. Water: Potable

2.02 ADMIXTURES

A. Source: Provide all admixtures used in the concrete mix from the same manufacturer.

B. Admixture Performance: Provides dense, durable concrete resistant to

chemical attack, wear, rebar corrosion, freeze-thaw attack, cracking, and segregation. All admixtures used shall be compatible. All admixtures shall be free of chlorides or other corrosive chemicals.

C. Air Entrainment: ASTM C260.

D. Water reducing agent: "Sonotard WR" by Sonneborn Building Products, "WRDA" by W.R. Grace & Company, "Pozzolith 100" by Master Builders Co. or equal as approved by the Engineer and conforming with ASTM C 494 Type A.

E. Air-entraining agent: "Aerolith" by Sonneborn Building Products, "Darex" by W.R. Grace & Company, "MB-VR" by Master Builders Company or equal approved by the Engineer conforming to ASTM C 260. To be used to obtain percent air-entrainment specified unless obtained by cement used.

F. High Early Agent: "Pozzolith 122-HE" by Master Builders or equal as approved by the Engineer and conforming with ASTM C 494 Type C and E.

G. No other admixtures may be used without Engineer approval.

H. Superplasticizers:

1. Meet ASTM C494 and use only Type F or G.

2. Hold slump of 5 inches or greater for the time required for placement into the structure.

3. Type F Superplasticizer: Batch plant added to extend plasticity time, control temperature of fresh concrete, reduce water 20 to 30 percent, and give higher strengths at all ages.

4. Type G Superplasticizer: Batch plant added to extend plasticity time, maintain setting characteristics similar to normal concrete throughout its recommended dosage range and at varying concrete temperatures, reduce water 30 to 40 percent, and give high-early and ultimate strengths.

5. Manufacturer and Product:

a. Master Builders, Inc., Cleveland, OH, Rheobuild or Pozzolith Polyheed at a dosage greater than 10 ounces per 100 pounds of cement.

b. W.R. Grace & Co., Cambridge, MA, Daracem 100.

c. Euclid Chemical Co., Cleveland, OH, Eucon Super F or 537G.

2.03 CONCRETE MIX

A. Mix concrete in accordance with ASTM C94.

B. Provide concrete of the following characteristics:

Comprehensive Strength	(7 days):	3000 psi (unless otherwise specified)
Comprehensive Strength	(28 days):	4000 psi (unless otherwise specified)
Aggregate Size (maximum):		3/8" largest dimension
Aggregate Size (minimum):		25% passing #50 sieve
Air Entrainment:		5% to 7%
Maximum Total Water to Cementitious Material Ratio (W/C):		0.45 maximum

C. Use accelerating admixtures in cold weather only when approved by Engineer. Use of admixtures will not relax cold weather placement requirements.

D. Add air entraining agent to concrete mix.

E. Use water-reducing admixtures in strict compliance with the manufacturer's directions. Admixtures to increase cement dispersion, or to provide increased workability for low-slump concrete, may be used at the Contractor's option subject to the Engineer's approval.

F. If a pumping process is utilized to convey concrete, established concrete mixtures may require increased proportion of cement and fine aggregate and a decreased proportion of coarse aggregate, but these mixtures may not be altered more than:

Cement	plus 20 lbs./cu. yd.
Fine Aggregate	plus 50 lbs./cu. yd.
Coarse Aggregate	minus 50 lbs./cu. yd.

2.04 FORMWORK

A. Bar supports shall be Class 1 plastic coated wire bar supports or plastic bar supports.

B. Formwork shall be sufficiently strong and stiff to prevent deflection during concrete placement.

C. Structurally design forms to meet applicable safety regulations, OSHA regulations, and other codes.

D. Finished concrete tolerances other than surface shall be minus 1/4 inch and plus 1/2 inch from the dimensions shown.

E. All concrete edges shall have a formed 3/4 inch chamfer, unless otherwise indicated.

F. Forms shall be left in place a minimum of 3 days after concrete placement.

G. Form ties shall have conical or spherical type inserts such that no metal is left within 1 inch of the concrete surface when tie ends are removed. Patch form tie holes with non-shrink grout.

H. Form ties shall not be in contact with galvanized reinforcing steel. Maintain a minimum 1/2 inch clearance between reinforcing steel and form ties.

I. Construction joints shall be formed with a keyway sufficient to transfer concrete shear capacity. Forming detail shall be subject to approval by the Engineer prior to placing any concrete.

PART 3 - EXECUTION

3.01 INSPECTION

A. Verify bollard, railings, anchors, seats, plates, reinforcement, and other items to be cast into concrete are accurately placed, held securely, and will not cause hardship in placing concrete.

B. Strength: Strength of concrete shall be considered satisfactory if the average of any five consecutive strength tests of the laboratory cured specimens representing each strength of concrete is equal to or greater than the specified strength and if no more than 20 percent of the strength tests have values less than specified.

C. Additional Tests:

1. If concrete shown by laboratory strength tests is defective, the Contractor may, at its own expense, conduct such testing as it may deem necessary. Test results so obtained, unless properly calibrated and correlated with other test data, shall not be used as a basis for acceptance or rejection.

2. If cores are taken for such determination they shall be in accordance with ASTM C 42. Testing shall be by an independent laboratory approved by the Engineer.

3. At least three cores shall be taken from each potentially deficient area. Locations will be determined by the Engineer. Damaged cores may be replaced.

4. Strength of cores from each member or area shall be considered satisfactory if their average is equal to or greater than 90% of the specified strength.

5. Core holes shall be plugged solid with grout approved by the Engineer.

3.03 PLACING CONCRETE

A. Notify Engineer minimum 24 hours prior to commencement of concreting operations. Engineer shall inspect reinforcing prior to concrete operation.

B. Prepare forms and reinforcement in accordance with ACI 3.01, and as specified herein.

C. Do not place concrete until soil bottoms, inserts, embedments, and other work to be built into the concrete have been inspected and approved by the Engineer and by all trades concerned.

D. Convey concrete from the mixer to the place of final deposit as rapidly as practicable by methods which will prevent separation or loss of ingredients and in a manner which will assure that the required quality of the concrete is retained.

E. Deposit, deliver and place concrete so that the time lapse between batching and placement shall not exceed 60 minutes. Concrete shall not be allowed a free fall of over 4 feet. Concrete shall be deposited as nearly as practicable in its final position to avoid segregation due to rehandling or flowing.

F. Hot Weather Placement: ACI 305.

G. Cold Weather Placement: ACI 306.

H. Ensure reinforcement, inserts, embedded parts, formed joints and expansion joints are not disturbed during concrete placement.

3.04 FINISHES AND EXPOSED SURFACES

A. All concrete shall be screeded to the established elevations, then steel troweled to the finish lines on the drawings with allowable tolerance not exceeding 1/8 inch in any direction when treated with a 10-foot long straightedge.

B. Honeycombing on any exposed surface shall be patched with non-shrink grout to the approval of the Engineer.

C. If the above requirements are not met, the Contractor shall, at its own expense, correct the conditions, as directed by the Engineer, using materials and methods approved by the Engineer.

D. Concrete walkway shall be given broom finish so as to provide a durable, non-slip surface as approved by the Engineer. Grooving shall be done using a tool specifically designed for that purpose.

E. Edge chamfer shall be as specified on the Drawings or as directed by the Engineer.

3.05 PATCHING

A. Patch imperfections as directed by the Engineer.

3.06 DEFECTIVE CONCRETE

A. Modify or replace concrete not conforming to required levels and lines, details, and elevations.

B. Repair or replace concrete not properly placed or of the specified type.

3.07 FIELD QUALITY CONTROL

A. Field inspection and testing will be performed in accordance with this specification.

3.08 CURING AND PROTECTION

A. Immediately after placement, protect concrete from premature drying, excessively hot or cold temperatures, and mechanical injury.

B. Forms shall remain in place for a minimum of 5 days or as approved by the Engineer.

C. Maintain concrete with minimal moisture loss at relatively constant temperature for period necessary for hydration of cement and hardening of concrete.

D. Water: Clean and drinkable.

PART 4 - MEASUREMENT AND PAYMENT

4.01 MEASUREMENT AND PAYMENT

A. Measurement and payment for Items 03300-1, CONCRETE EDGE FILL – shall be made at the contract unit price per cubic yard installed complete. This price shall include full compensation for mobilization, pumping, demolition and reinforcement, concrete bonding agent, curing, hardware installed, survey, form removal, concrete testing, finishing and all other materials, the furnishing of all labor, materials, tools and equipment, and all other incidental work necessary to complete the work under this item, as shown on the Drawings, and as herein specified.

4.02 PAYMENT ITEMS

ITEM	DESCRIPTION	UNIT PRICE
03300-1	CONCRETE EDGE FILL	Cubic Yard

END OF SECTION

SECTION 03310
PRE-CAST CONCRETE PLANKS

PART 1 - GENERAL

1.01 WORK INCLUDED

A. The Contractor shall furnish and place pre-cast cement concrete boat ramp planks to match existing complete with stainless steel connections in the locations shown on the Contract Drawings, as herein specified and as directed by the Engineer.

B. Contractor shall make necessary repairs to the existing pre-cast concrete planks including but not limited to; stainless steel hardware repairs and new stainless steel hardware and fasteners as directed.

C. The Contractor shall re-set the existing pre-cast concrete boat ramp planks in the locations shown on the Contract Drawings, as herein specified and as directed by the Engineer.

1.02 RELATED SECTIONS

02002	MOBILIZATION AND DEMOBILIZATION
02003	DEMOLITION AND REMOVAL
03300	MARINE CONCRETE

1.03 REFERENCES

The latest edition of the following:

A. ACI Standards: 214R; 301; 304R; 305R; 306.1; 309R; 318/318R

B. American Welding Society: D1.1/D1.1M; D1.4

C. ASTM Standards: A123/A123M; A153/A153M; A193; A27/A27M; A276; A36/A36M; A47/A47M; A496; A615/A615M; A775/A775M; A780; A82; C1260; C143; C172; C173; C231; C31/C31M; C39; C42; C94/C94M

D. Precast/Prestressed Concrete Institute: MNL-116; MNL-120

E. Commonwealth of Massachusetts Department of Transportation (MassDOT): Specifications Standard Specifications for Highways and Bridges

1.04 MODIFICATION OF REFERENCES

A. In the ACI publications, the advisory provisions shall be considered to be mandatory, as though the word "shall" has been substituted for "should" wherever it appears; reference to the "Building Official," the "Structural Engineer" and the "Architect/Engineer" shall be interpreted to mean the Owner's Representative.

1.05 SYSTEM DESCRIPTION

A. The work includes the provision of precast non-prestressed concrete herein referred to as precast members. Precast members shall be the product of a manufacturer specializing in the production of precast concrete members.

1.06 DESIGN REQUIREMENTS

A. The precast members, as shown on the drawings, are designed for the application indicated. The Contractor is responsible for precast member design relating to handling, storage, transporting, and placement. Design precast members for handling without cracking in accordance with the PCI MNL-120.

B Loadings for members and connections shall include applicable construction loads such as handling, storing, transportation, placement loads, and other applicable loads.

1.07 SUBMITTALS

A. Shop Drawings:

1. Drawings of precast concrete members.

B. Design Data:

1. Precast concrete members design calculations
2. Concrete mix design

C. Test Reports:

1. Testing: All personnel and laboratories testing concrete shall be licensed by the Commonwealth of Massachusetts. The Contractor shall provide the Engineer with the name, address and a copy of applicable licenses of the testing company.

2. Provide results for fresh concrete testing (slump, water-cement ratio, temperature, air content) and compressive strength test of cured cylinders.

3. Submit proposed mix designs using 1-1/2 inch, 3/4 inch and 3/8 inch aggregate to the Engineer for review prior to commencement of concreting operations.

4. The Contractor shall coordinate the date and location of tests with the Engineer before any concrete work is started.

5. Results of concrete testing shall be delivered to the Engineer within three (3) working days of the tests.

6. Concrete mixture proportions
   a. Submit copies of laboratory test reports showing that the mix has been successfully tested to produce concrete with the properties specified and that mix will be suitable for the job conditions.
      The laboratory test reports shall include mill test and all other test for cement, silica fume, aggregates, and admixtures. Provide maximum nominal aggregate size, gradation analysis, percentage retained and passing sieve, and a graph of percentage retained versus sieve size. Submit test results for aggregates in accordance with ASTM C 1260 for potential alkali-silica reactions. Test reports shall be submitted along with the concrete mix design. Obtain approval before concrete placement.

1.08 QUALITY ASSURANCE

A. Perform work in accordance with ACI 301, ACI 318. MNL-116, MNL-120

B. Obtain materials from same source throughout the work.

1.09 DELIVERY, STORAGE, AND HANDLING

A. In transporting members by truck, railroad car, or barge, provision shall be made for supporting the members as described below, except battens can be continuous over more than one stack of units, with adequate bracing to ensure their maintaining the vertical position and damping of dangerous vibrations. Trucks with double bolsters are satisfactory provided the members are fully seated on the outer bolsters at not more than 3 feet or the depth of the member from the end and the inner bolster is not more

than 8 feet from the end of the member or the designated pickup point. Adequate padding material shall be provided between tie chains or cables to preclude chipping of concrete.

B. Any noticeable indication of lateral deflection or vibration during transportation shall be corrected by rigid bracing between members or by means of lateral trussing.

C. Storage areas for precast members shall be stabilized, and suitable foundations shall be provided, so differential settlement of twisting of member will not occur.

D. Precast members shall be stored in a manner such that they are protected from adverse weather and interference with construction operations on the site.

E. Stacked members shall be separated and supported by battens placed across the full width of each bearing point. Battens shall be arranged in vertical planes at a distance not greater than the depth of the member from designated pickup points. Battens shall not be continuous over more than one stack of precast units. Stacking of members shall be such that lifting devices will be accessible and undamaged. The upper members of a stacked tier shall not be used as storage areas for shorter members or equipment.

F. The location of pickup points for handling of the members and details of the pickup devices shall be shown in shop drawings. Members shall be handled only by means of approved devices at designated locations. Members shall be maintained in an upright position of all times and picked up and supported as shown in approved shop drawings.

PART 2 - PRODUCTS

2.01 CONCRETE

A. Concrete shall meet the requirements of MA Highway Standard Specifications 5000 psi, with a maximum w/c ratio of 0.450 is accordance with Section 03300.

a. Chloride Ion Penetration. To ensure the durability of concrete in marine environment, concrete shall be proportioned to have the chloride ion penetration test in accordance with ASTM C 1202, and be below 2000 coulombs for concrete specimens tested at 28 days.

b. Three-eighths inch (3/8") coarse aggregate shall be used for all boat ramp construction, which will receive the "v" grooved finish. Concrete shall be Type II or IIA and conform to section 901.65 E.

c. ACI 304R, ACE 305R for hot weather concreting, ACI 306.1 for cold weather Concreting, and ACI 309R, unless otherwise specified.

2.02 REINFORCING BARS

A. Reinforcing bars shall conform to ASTM A 615/A 615M, Grade 60.

B. Epoxy-coated steel bars shall comply with the requirements of ASTM A 775/A 775M, including written certifications for coating material and coated bars.

C. Wire shall conform to ASTM A82 or ASTM A 496.

2.03 STAINLESS STEEL CONNECTION

A. Stainless steel connections shall conform to ASTM A 193 and ASTM A 276.

2.04 STAINLESS STEEL HARDWARE AND FASTENER REPAIRS

A. Stainless steel hardware and fastener repairs shall conform to ASTM A 193 and ASTM A 276.

B. Hardware and fastener repairs shall be performed where existing connections are deteriorated or not functioning. Repairs shall be as indicated on the Contract Drawings.

2.05 CRUSHED STONE BASE

A. Crushed stone where shown on the plans shall consist of inert material that is hard, durable stone, free from loam, clay, surface coatings, and other deleterious materials. Gradation requirements shall conform to the following:

U.S. Sieve No.	Percent Passing by Weight
4"	100
2"	90-100
1"	10
#4	2

Maximum size of stone shall be three inches (3") largest dimension.

PART 3 - EXECUTION

3.01 GENERAL

A. Pre-cast members shall be erected after the concrete has attained the specified compressive strength, unless otherwise approved by the precast manufacturer. Place in accordance with the approved shop drawings, PCI MNL-116 and PCI MNL-120 (Chapter 8), for tolerances. Provide a 1:500 tolerance, if no tolerance is specified. Follow the manufacturer's recommendations for maximum construction loads. Place precast members recommendations for maximum construction loads. Place precast members level, plumb, square, and true within tolerances. Align member ends.

3.02 SITE PREPARATION AND GRADING

A. The Contractor shall grade all areas required to achieve the design subgrades and final grades as shown on the Drawings. Grade shall be even as practical, free from any irregularities.

B. Crushed stone base within the area of the proposed boat ramp shall be graded evenly and smooth prior to placement of filter fabric and crushed stone.

3.03 PLACEMENT OF PRE-CAST CONCRETE PLANKS

A. Pre-cast planks shall be installed after the concrete has attained the specified compressive strength, unless otherwise approved by the pre-cast manufacturer.

B. Pre-cast planks shall be braced in place during construction, unless design calculations submitted with the shop drawings indicate bracing is not required.

C. Pre-cast planks shall be placed level, plumb, square and true within tolerances and as indicated on the Contract Drawings. End of pre-cast planks shall align.

3.04 CONSTRUCTION RECORDS

A. Complete construction records shall be kept of the manufacturing, handling, and erection of the pre-cast concrete planks. Records shall be kept for, but not limited to, the following items:

a. Specifications of material used in the manufacture of the members;

b. Time-temperature history of the concrete members from casting to the time of delivery to the site;

c. Records of inspection of the members each time they are moved; and

d. Records of any defects in the members and any corrective measures taken.

PART 4 - MEASUREMENT AND PAYMENT

4.01 MEASUREMENT AND PAYMENT

A. Measurement and Payment for REMOVE AND RESET EXISITNG PRE-CAST CONCRETE PLANKS shall be made under Contract Item 03310-1, for the unit price per lump sum, which price shall include full compensation including removal of existing pre-cast concrete planks, stockpiling and storage of existing pre-cast concrete planks, re-setting of pre-cast concrete planks to be reused, and all other materials, equipment, supervision, survey, labor, and incidental or appurtenant work required as shown on the Contract Drawings, as specified herein, and as directed by the Engineer.

B. Measurement and Payment for NEW PRE-CAST CONCRETE PLANKS shall be made under Contract Item 03310-2, for the unit price per square foot, which price shall include full compensation including supply of concrete, forming, erection, reinforcing steel, form removal, concrete testing, and all other materials, equipment, supervision, survey, labor, and incidental or appurtenant work required as shown on the Contract Drawings, as specified herein, and as directed by the Engineer.

C. Measurement and Payment for CRUSHED STONE BASE shall be made under Contract Item 03310-3, for the unit price per ton, which price shall include full compensation including supply and installation of crushed stone and all other materials, equipment, supervision, survey, labor, and incidental or appurtenant work required as shown on the Contract Drawings, as specified herein, and as directed by the Engineer.

4.02 PAYMENT ITEM

ITEM	DESCRIPTION	UNIT PRICE
03310-1	REMOVE AND RESET EXISING PRE-CAST CONCRETE PLANKS	Lump Sum
03310-2	NEW PRE-CAST CONCRETE PLANKS	Square Foot
03310-3	CRUSHED STONE BASE	Ton

END OF SECTION

SECTION 05000
MISCELLANEOUS METALS

PART 1 - GENERAL

1.01 WORK INCLUDED

A. Shop-fabricated ferrous metal items, galvanized or primed and painted, including, bolts, plates, channels, angles, and all other miscellaneous metal fabrications shown on the Drawings.

1.02 REFERENCES

A. American Society for Testing and Materials (ASTM)

1. A36 - Structural Steel.

2. A307 - Low-Carbon Steel Externally and Internally Threaded Standard Fasteners.

3. A153 - Galvanized Steel Coatings.

4. A325 - High-Strength Bolts for Structural Joints.

5. A276 - Type 316 Stainless Steel.

6. A386 - Zinc-Coating Hot-Dip on Assembled Steel Products.

7. B308 - Aluminum Alloy Sheet and Plate, Alloy 6061-T6.

8. F1 083-90-Specification for Pipe, Steel, Hot-Dipped, Zinc Coated (Galvanized) Welded for Fence Structures

B. American Welding Society (AWS)

1. AWS D1.1 - Structural Welding Code.

C. Structural Steel Painting Manual (SSPC)

1.03 RELATED SECTIONS

02606	TIMBER PILES
03310	PRE-CAST CONCRETE PLANKS
06130	HEAVY TIMBER FRAMING

1.04 SUBMITTALS

A. The Contractor shall submit shop drawings for any steel fabrication, including reinforcing, fixing/splice plates and bracing.

B. The Contractor shall indicate profiles, sizes, connection attachments, reinforcing, anchorage, size and type of fasteners and accessories.

C. The Contractor shall indicate welded connections using standard AWS welding symbols. The Contractor shall indicate net weld lengths.

PART 2 - PRODUCTS

2.01 MATERIALS

A. Steel Sections: ASTM A36.

B. Deck Screws: ASTM A 316 Stainless steel deck screws

C. Stainless steel connections for pre-cast concrete planks: ASTM A193 and A 276.

C. Bolts, Nuts, and Washers and Screws: ASTM A307, A153. All machine bolts and lag screws to be galvanized. Washers shall be cast-iron ogee, malleable iron, or plate or cut washers, as shown on the Contract Documents. Provide bolts with washers under nut and head. Nails shall be galvanized spikes with ring shanks. Plates shall be ASTM A36, minimum.

D. Welding Materials: AWS D1.1; type required for ferrous materials being welded.

E. Touch-up Primer for Galvanized Surfaces shall be in accordance with ASTM A780.

F. Hexagon nuts, bolts, and washers to be in accordance with ASTM A307.

2.02 FABRICATION

A. The Contractor shall verify dimensions in the field and of related products and materials prior to submission of shop drawings.

B. The Contractor shall fabricate items with joints tightly fitted and secured.

C. The Contractor shall fit and shop assemble in largest practical sections, for delivery to the site.

D. The Contractor shall grind exposed welds flush and smooth with adjacent

finished surface. The Contractor shall ease exposed edges to small uniform radius.

E. The Contractor shall make exposed joints butt tight, flush, hairline, or as indicated.

F. The Contractor shall supply components required for anchorage of metal fabrications. The Contractor shall fabricate anchorage and related components of same material and finish as metal fabrication, except where specifically noted otherwise.

G. Specially fabricated plates or washers may be required as necessary.

2.03 FINISH

A. The Contractor shall clean surfaces of rust, scale, grease, and foreign matter prior to finishing.

B. Hot-dip galvanize all steel items according to ASTM A 123 or A 153, unless otherwise noted. The Contractor shall galvanize ferrous metal items to minimum 2.0 oz/sq ft zinc coating.

PART 3 - EXECUTION

3.01 PREPARATION

A. The Contractor shall clean and strip steel items to bare metal where welding is scheduled.

B. The Contractor shall make provision for erection loads with temporary bracing. The Contractor shall keep work in alignment.

3.02 INSTALLATION

A. The Contractor shall install items plumb and level, accurately fitted, free from distortion or defects.

B. The Contractor shall perform field welding in accordance with AWS D1.1.

C. After installation, the Contractor shall touch-up field welds, scratched or damaged surfaces in accordance to manufacturer's recommendations.

3.03 DEFECTIVE WORK

A. Any item installed in an unsafe manner, not to industry standards, not in accordance with Contract Documents or to the satisfaction of the Engineer

and Owner.

B. Defective work will be repaired or replaced to the satisfaction of the Engineer, at no additional cost to the Owner.

PART 4 - MEASUREMENT AND PAYMENT

4.01 MEASUREMENT AND PAYMENT

A. No separate measurement or payment will be made for work associated with this section. Include all costs for work within this section under items for which these miscellaneous metals are required.

END OF SECTION

SECTION 06130
HEAVY TIMBER FRAMING

PART 1 GENERAL

1.01 SCOPE OF WORK

Work under this section shall include the extension of the South Pier, and the timber lagging and members associated with the timber pier fendering improvements to both piers, including but not limited to, stringers, pile caps, blocking, lagging and decking, nuts, bolts, washers, fasteners, shop-fabricated ferrous metal items, galvanized or primed and painted, including bolts, plates, channels, angles, and other miscellaneous metal fabrications as required and as indicated by the Contract Drawings and specified herein.

1.02 REFERENCES

1. AMERICAN SOCIETY FOR TESTING AND MATERIALS (ASTM).

   A36 Structural Steel

   A123 Zinc (Hot-Dip Galvanized) Coatings on Iron and Steel Products.

   A153 Specification for Zinc Coating (Hot-Dip) on Iron and Steel Hardware.

   A276 Type 316 Stainless Steel

   A307 Carbon Steel Externally or Internally Threaded Standard Fasteners.

   A386 Zinc Coating Hot-Dip on Assembled Steel products

2. AMERICAN WOOD PRESERVERS ASSOCIATION (AWPA)

   C1 All Timber Products - Preservative Treatment Pressure Processes.

   C2 Lumber, Timbers, Bridge Ties and Mine Ties - Preservative Treatment by Pressure Process

   C18 Standard for Pressure Treatment Material in Marine Construction.

   M4 Care of Pressure Treated Wood Products.

3. AMERICAN WELDING SOCIETY

   AWS D1.1 Structural Welding Code

1.03 SUBMITTALS

Submit certificates for each size of timber, preservative treatment, and galvanized hardware.

1.04 DELIVERY AND STORAGE

Stack lumber and timber off the ground on skids and under cover in a manner that prevents warping and allows shedding of water. Handle timber with rope or chain slings without dropping, breaking outer fibers, bruising, or penetrating the surface with tools. Do not use cant dogs, peaveys, hooks, or pike poles. Protect timber and hardware from damage.

PART 2 PRODUCTS

2.01 TIMBER

Timber for pile caps, stringers, and blocking shall be solid sawn lumber, S4S, Southern Yellow Pine with a stress rating Structural Select. All timber framing members shall be treated with CCA (Chromated Copper Arsenate) to a minimum retention of 2.5 lbs. per cubic foot. Timber decking shall be Southern Yellow Pine with a stress rating for No. 2 or better, and shall be ACQ treated.

2.02 HARDWARE

A. MATERIALS

1. Steel Sections: ASTM A36.

2. Deck Screws: ASTM A 316 Stainless steel deck screws

3. Bolts, Nuts, and Washers and Screws: ASTM A307, A153. All machine bolts and lag screws shall be galvanized. Washers shall be cast-iron ogee, malleable iron, or plate or cut washers, as shown on the Contract Documents. Provide bolts with washers under nut and head. Nails shall be galvanized spikes with ring shanks. Decking fasteners shall be stainless steel deck screws. Plates shall be ASTM A36, minimum.

4. Welding Materials: AWS D1.1; type required for ferrous materials being welded.

5. Touch-up Primer for Galvanized Surfaces shall be in accordance with ASTM A780.

6. Hexagon nuts, bolts, and washers to be in accordance with ASTM A307.

B. FABRICATION

1. The Contractor shall verify dimensions in the field and of related products and materials prior to submission of shop drawings.

2. The Contractor shall fabricate items with joints tightly fitted and secured.

3. The Contractor shall fit and shop-assemble in largest practical sections, for delivery to the site.

4. The Contractor shall grind exposed welds flush and smooth with adjacent finished surface. The Contractor shall ease exposed edges to small uniform radius.

5. The Contractor shall make exposed joints butt tight, flush, hairline, or as indicated.

6. The Contractor shall supply components required for anchorage of metal fabrications. The Contractor shall fabricate anchorage and related components of same material and finish as metal fabrication, except where specifically noted otherwise.

7. Specially fabricated plates or washers may be required as necessary.

C. FINISH

1. The Contractor shall clean surfaces of rust, scale, grease, and foreign matter prior to finishing.

2. Hot-dip galvanize all steel items according to ASTM A 123 or A 153, unless otherwise noted. The Contractor shall galvanize ferrous metal items to minimum 2.0 oz/sq ft zinc coating.

PART 3 EXECUTION

3.01 CONSTRUCTION

A. Fastening: Under all bolt heads and nuts in contact with wood use ogee or dock washers as indicated. Burr threads of all bolts after nuts have been finally tightened. Vertical bolts shall have nuts on the lower end. Where bolts are used to fasten timber to timber, timber to concrete, or timber to steel, bolt members together when they are installed and retighten immediately before final acceptance of the contract. Bolts shall have ½ inch, but not more than 2 inches, of exposed thread beyond the nut for future re-tightening. Provide timber connectors of the types shown on the drawings.

B. Framing: Cut and frame all lumber and timber so that joints will have fit over contact surface. Unless indicated no shimming will be permitted in making joints. Open joints are unacceptable. Bore holes for drift pins with a bit 1/16 inch smaller in diameter than the drift pin. Bore holes for bolts with a bit 1/16 inch larger in diameter than the bolt. Bore holes for lag screws in two parts. Lead holes for the shank shall have the same diameter as the shank. Lead hole for the threaded portion shall have a diameter equal to approximately two-thirds of the shank diameter. Counterbore for countersinking whenever smooth faces are indicated or specified.

C. Proper care shall be exercised in handling and installing of all materials to prevent damage to the finished surfaces.

D. All work shall be erected to accurate grades and alignments.

3.02 FIELD TREATMENT

A. Lumber and Timber: Field treat cuts, bevels, notches, refacings, and abrasions according to AWPA M4 and preservative treatment manufacturer's instructions. Trim cuts and abrasions before treating. Paint depressions and openings around bolt holes, joints, and gaps, including recesses formed by counterboring, with the same preservative used in the pressure treatment. After bolt or screw is in place, fill depression with hot pitch or bitumastic compound.

B. Galvanized Surfaces: Repair and recoat galvanized coating damaged to the point that the base metal is exposed. Thoroughly clean the damaged area by wire brushing and remove all traces of welding flux and loose or cracked galvanized coating before painting. Paint cleaned area with two coats of galvanizing repair paint.

PART 4 - MEASUREMENT AND PAYMENT

4.01 MEASUREMENT AND PAYMENT

A. Measurement and Payment for TIMBER PIER EXTENSIONS shall be made under Contract Item 06130-1, for the unit price per board foot, which price shall include full compensation for the extension of the timber pier complete, including supply and installation of timber members, including hardware, miscellaneous metal, painting, and all other material, equipment, labor, survey, supervision and incidental or appurtenant work required, as shown on the Contract Drawings, as specified herein, and as directed by the Engineer.

B. Measurement and Payment for TIMBER PIER FENDERING shall be made under the Contract Item 06130-2, for the unit price per board foot, which price shall include full compensation for the installation of the timber pier fendering complete, including supply and installation of timber members, including hardware, miscellaneous metal, painting, and all other material, equipment, labor, survey,

supervision and incidental or appurtenant work required, as shown on the Contract Drawings, as specified herein, and as directed by the Engineer.

B. PAYMENT ITEMS

ITEM	DESCRIPTION	UNIT PRICE
06130-1	TIMBER PIER EXTENSIONS	Board Foot
06130-2	TIMBER PIER FENDERING	Board Foot

END OF SECTION

"ATTACHMENT A"

[Wage Rates]

THE COMMONWEALTH OF MASSACHUSETTS
EXECUTIVE OFFICE OF LABOR AND WORKFORCE DEVELOPMENT
DEPARTMENT OF LABOR STANDARDS

Prevailing Wage Rates

As determined by the Director under the provisions of the Massachusetts General Laws, Chapter 149, Sections 26 to 27H

CHARLES D BAKER
Governor

KARYN E POLITO
Lt Governor

RONALD L WALKER, II
Secretary

WILLIAM D MCKINNEY
Director

Awarding Authority: Town of Nantucket

Contract Number:

City/Town: NANTUCKET

Description of Work: Children's Beach Boat Ramp Improvements - Repairs/extension of existing timber pier. Reconfiguration, upgrade and improvement to existing concrete boat ramp.

Job Location: 15 Harborview Way

Information about Prevailing Wage Schedules for Awarding Authorities and Contractors

- This wage schedule applies only to the specific project referenced at the top of this page and uniquely identified by the "Wage Request Number" on all pages of this schedule.
- An Awarding Authority must request an updated wage schedule from the Department of Labor Standards ("DLS") if it has not opened bids or selected a contractor within 90 days of the date of issuance of the wage schedule. For CM AT RISK projects (bid pursuant to G.L. c.149A), the earlier of: (a) the execution date of the GMP Amendment, or (b) the bid for the first construction scope of work must be within 90-days of the wage schedule issuance date.
- The wage schedule shall be incorporated in any advertisement or call for bids for the project as required by M.G.L. c. 149, § 27. The wage schedule shall be made a part of the contract awarded for the project. The wage schedule must be posted in a conspicuous place at the work site for the life of the project in accordance with M.G.L. c. 149 § 27. The wages listed on the wage schedule must be paid to employees performing construction work on the project whether they are employed by the prime contractor, a filed sub-bidder, or any sub-contractor.
- All apprentices working on the project are required to be registered with the Massachusetts Department of Labor Standards, Division of Apprentice Standards (DLS/DAS). Apprentice must keep his/her apprentice identification card on his/her person during all work hours on the project. An apprentice registered with DAS may be paid the lower apprentice wage rate at the applicable step as provided on the prevailing wage schedule. **Any apprentice not registered with DLS/DAS regardless of whether or not they are registered with any other federal, state, local, or private agency must be paid the journeyworker's rate for the trade.**
- The wage rates will remain in effect for the duration of the project, except in the case of multi-year public construction projects. For construction projects lasting longer than one year, awarding authorities must request an updated wage schedule. Awarding authorities are required to request these updates no later than two weeks before the anniversary of the date the contract was executed by the awarding authority and the general contractor. For multi-year CM AT RISK projects, awarding authority must request an annual update no later than two weeks before the anniversary date, determined as the earlier of: (a) the execution date of the GMP Amendment, or (b) the execution date of the first amendment to permit procurement of construction services. Contractors are required to obtain the wage schedules from awarding authorities, and to pay no less than these rates to covered workers. The annual update requirement is not applicable to 27F "rental of equipment" contracts.
- Every contractor or subcontractor which performs construction work on the project is required to submit weekly payroll reports and a Statement of Compliance directly to the awarding authority by mail or email and keep them on file for three years. Each weekly payroll report must contain: the employee's name, address, occupational classification, hours worked, and wages paid. Do not submit weekly payroll reports to DLS. A sample of a payroll reporting form may be obtained at http://www mass.gov/dols/pw.
- Contractors with questions about the wage rates or classifications included on the wage schedule have an affirmative obligation to inquire with DLS at (617) 626-6953.
- Employees not receiving the prevailing wage rate set forth on the wage schedule may report the violation to the Fair Labor Division of the office of the Attorney General at (617) 727-3465.
- Failure of a contractor or subcontractor to pay the prevailing wage rates listed on the wage schedule to all employees who perform construction work on the project is a violation of the law and subjects the contractor or subcontractor to civil and

Classification	Effective Date	Base Wage	Health	Pension	Supplemental Unemployment	Total Rate
Construction						
(2 AXLE) DRIVER - EQUIPMENT *TEAMSTERS JOINT COUNCIL NO. 10 ZONE B*	08/01/2016	$32.15	$10.91	$10.08	$0.00	$53.14
	12/01/2016	$32.15	$10.91	$10.89	$0.00	$53.95
3 AXLE) DRIVER - EQUIPMENT *TEAMSTERS JOINT COUNCIL NO. 10 ZONE B*	08/01/2016	$32.22	$10.91	$10 08	$0.00	$53.21
	12/01/2016	$32.22	$10.91	$10.89	$0.00	$54.02
(4 & 5 AXLE) DRIVER EQUIPMENT *TEAMSTERS JOINT COUNCIL NO. 10 ZONE B*	08/01/2016	$32.34	$10.91	$10.08	$0 00	$53.33
	12/01/2016	$32.34	$10.91	$10.89	$0.00	$54.14
ADS/SUBMERSIBLE PILOT *PILE DRIVER LOCAL 56 (ZONE 1)*	08/01/2015	$88.29	$9.80	$19.23	$0.00	$117.32
For apprentice rates see "Apprentice- PILE DRIVER"						
AIR TRACK OPERATOR *LABORERS - ZONE 2*	06/01/2016	$32.40	$7.45	$12.65	$0.00	$52.50
	12/01/2016	$33.15	$7.45	$12.65	$0.00	$53.25
For apprentice rates see "Apprentice- LABORER"						
ASBESTOS WORKER (PIPES & TANKS) *HEAT & FROST INSULATORS LOCAL 6 (SOUTHERN MASS)*	06/01/2016	$32.90	$11.50	$7.10	$0.00	$51.50
	12/01/2016	$33.90	$11.50	$7.10	$0.00	$52.50
	06/01/2017	$34.90	$11.50	$7.10	$0.00	$53.50
	12/01/2017	$35.90	$11.50	$7.10	$0.00	$54.50
	06/01/2018	$36.90	$11.50	$7.10	$0.00	$55.50
	12/01/2018	$37.90	$11.50	$7.10	$0.00	$56.50
	06/01/2019	$38.90	$11.50	$7.10	$0.00	$57.50
	12/01/2019	$39 90	$11 50	$7.10	$0.00	$58 50
	06/01/2020	$40.90	$11.50	$7.10	$0.00	$59.50
	12/01/2020	$41.90	$11.50	$7.10	$0.00	$60.50
ASPHALT RAKER *LABORERS - ZONE 2*	06/01/2016	$31.90	$7.45	$12.65	$0.00	$52.00
	12/01/2016	$32.65	$7.45	$12.65	$0.00	$52.75
For apprentice rates see "Apprentice- LABORER"						
ASPHALT/CONCRETE/CRUSHER PLANT-ON SITE *OPERATING ENGINEERS LOCAL 4*	06/01/2016	$44.23	$10.00	$15.15	$0.00	$69.38
	12/01/2016	$45.48	$10.00	$15.15	$0.00	$70.63
	06/01/2017	$46 48	$10 00	$15.15	$0.00	$71 63
	12/01/2017	$47.48	$10.00	$15.15	$0.00	$72.63
For apprentice rates see "Apprentice- OPERATING ENGINEERS"						
BACKHOE/FRONT-END LOADER *OPERATING ENGINEERS LOCAL 4*	06/01/2016	$44.23	$10.00	$15.15	$0.00	$69.38
	12/01/2016	$45.48	$10.00	$15.15	$0.00	$70.63
	06/01/2017	$46.48	$10.00	$15.15	$0 00	$71.63
	12/01/2017	$47.48	$10.00	$15.15	$0.00	$72.63
For apprentice rates see "Apprentice- OPERATING ENGINEERS"						
BARCO-TYPE JUMPING TAMPER *LABORERS - ZONE 2*	06/01/2016	$31.90	$7.45	$12.65	$0.00	$52.00
	12/01/2016	$32.65	$7.45	$12.65	$0.00	$52.75
For apprentice rates see "Apprentice- LABORER"						
BLOCK PAVER, RAMMER / CURB SETTER *LABORERS - ZONE 2*	06/01/2016	$32.40	$7.45	$12.65	$0 00	$52.50
	12/01/2016	$33.15	$7.45	$12.65	$0.00	$53.25
For apprentice rates see "Apprentice- LABORER"						
BOILER MAKER *BOILERMAKERS LOCAL 29*	01/01/2016	$41.62	$6.97	$16.21	$0.00	$64.80
	01/01/2017	$42.92	$6.97	$16.21	$0.00	$66.10

Classification	Effective Date	Base Wage	Health	Pension	Supplemental Unemployment	Total Rate

Apprentice - *BOILERMAKER - Local 29*

Effective Date - 01/01/2016

Step	percent	Apprentice Base Wage	Health	Pension	Supplemental Unemployment	Total Rate
1	65	$27.05	$6.97	$10.54	$0.00	$44.56
2	65	$27.05	$6.97	$10.54	$0.00	$44.56
3	70	$29.13	$6.97	$11.35	$0.00	$47.45
4	75	$31.22	$6.97	$12.16	$0.00	$50.35
5	80	$33.30	$6.97	$12.97	$0.00	$53.24
6	85	$35.38	$6.97	$13.78	$0.00	$56.13
7	90	$37.46	$6.97	$14.59	$0.00	$59.02
8	95	$39.54	$6.97	$15.40	$0.00	$61.91

Effective Date - 01/01/2017

Step	percent	Apprentice Base Wage	Health	Pension	Supplemental Unemployment	Total Rate
1	65	$27.90	$6.97	$10.54	$0.00	$45.41
2	65	$27.90	$6.97	$10.54	$0.00	$45.41
3	70	$30.04	$6.97	$11.35	$0.00	$48.36
4	75	$32.19	$6.97	$12.16	$0.00	$51.32
5	80	$34.34	$6.97	$12.97	$0.00	$54.28
6	85	$36.48	$6.97	$13.78	$0.00	$57.23
7	90	$38.63	$6.97	$14.59	$0.00	$60.19
8	95	$40.77	$6.97	$15.40	$0.00	$63.14

Notes:

Apprentice to Journeyworker Ratio:1:5

BRICK/STONE/ARTIFICIAL MASONRY (INCL. MASONRY WATERPROOFING)	08/01/2016	$50 76	$10 18	$19.22	$0.00	$80 16
BRICKLAYERS LOCAL 3 (NEW BEDFORD)	02/01/2017	$51.33	$10.18	$19.22	$0.00	$80.73

Classification	Effective Date	Base Wage	Health	Pension	Supplemental Unemployment	Total Rate

Apprentice - *BRICK/PLASTER/CEMENT MASON - Local 3 New Bedford*

Effective Date - 08/01/2016

Step	percent	Apprentice Base Wage	Health	Pension	Supplemental Unemployment	Total Rate
1	50	$25.38	$10.18	$19.22	$0.00	$54.78
2	60	$30.46	$10.18	$19.22	$0.00	$59.86
3	70	$35.53	$10.18	$19.22	$0.00	$64.93
4	80	$40.61	$10.18	$19.22	$0.00	$70.01
5	90	$45.68	$10.18	$19.22	$0.00	$75.08

Effective Date - 02/01/2017

Step	percent	Apprentice Base Wage	Health	Pension	Supplemental Unemployment	Total Rate
1	50	$25.67	$10.18	$19.22	$0.00	$55.07
2	60	$30.80	$10.18	$19.22	$0.00	$60.20
3	70	$35.93	$10.18	$19.22	$0.00	$65.33
4	80	$41.06	$10.18	$19.22	$0.00	$70.46
5	90	$46.20	$10.18	$19.22	$0.00	$75.60

Notes:

Apprentice to Journeyworker Ratio:1:5

BULLDOZER/GRADER/SCRAPER *OPERATING ENGINEERS LOCAL 4*	06/01/2016	$43.81	$10.00	$15.15	$0 00	$68.96
	12/01/2016	$45.04	$10.00	$15.15	$0.00	$70.19
	06/01/2017	$46.03	$10.00	$15.15	$0.00	$71.18
	12/01/2017	$47.02	$10.00	$15.15	$0.00	$72.17
For apprentice rates see "Apprentice- OPERATING ENGINEERS"						
CAISSON & UNDERPINNING BOTTOM MAN *LABORERS - FOUNDATION AND MARINE*	06/01/2016	$36.95	$7.45	$14.00	$0.00	$58.40
	12/01/2016	$37.95	$7.45	$14 00	$0.00	$59.40
For apprentice rates see "Apprentice- LABORER"						
CAISSON & UNDERPINNING LABORER *LABORERS - FOUNDATION AND MARINE*	06/01/2016	$35.80	$7.45	$14.00	$0.00	$57.25
	12/01/2016	$36.80	$7.45	$14.00	$0.00	$58.25
For apprentice rates see "Apprentice- LABORER"						
CAISSON & UNDERPINNING TOP MAN *LABORERS - FOUNDATION AND MARINE*	06/01/2016	$35.80	$7.45	$14.00	$0.00	$57.25
	12/01/2016	$36.80	$7.45	$14 00	$0.00	$58.25
For apprentice rates see "Apprentice- LABORER"						
CARBIDE CORE DRILL OPERATOR *LABORERS - ZONE 2*	06/01/2016	$31.90	$7.45	$12.65	$0.00	$52.00
	12/01/2016	$32.65	$7.45	$12.65	$0.00	$52.75
For apprentice rates see "Apprentice- LABORER"						
CARPENTER *CARPENTERS -ZONE 1 (Metro Boston)*	09/01/2016	$45.01	$9.80	$16.82	$0.00	$71.63
	03/01/2017	$46.09	$9.80	$16 82	$0.00	$72.71
	09/01/2017	$47.21	$9.80	$16.82	$0.00	$73.83
	03/01/2018	$48.32	$9.80	$16.82	$0.00	$74.94
	09/01/2018	$49.47	$9.80	$16.82	$0.00	$76.09
	03/01/2019	$50.62	$9.80	$16.82	$0.00	$77.24

Classification	Effective Date	Base Wage	Health	Pension	Supplemental Unemployment	Total Rate

Apprentice - *CARPENTER - Zone 1 Metro Boston*

Effective Date - 09/01/2016

Step	percent	Apprentice Base Wage	Health	Pension	Supplemental Unemployment	Total Rate
1	50	$22.51	$9.80	$1.63	$0.00	$33.94
2	60	$27.01	$9.80	$1.63	$0.00	$38.44
3	70	$31.51	$9.80	$11.93	$0.00	$53.24
4	75	$33.76	$9.80	$11.93	$0.00	$55.49
5	80	$36.01	$9.80	$13.56	$0.00	$59.37
6	80	$36.01	$9.80	$13.56	$0.00	$59.37
7	90	$40.51	$9.80	$15.19	$0.00	$65.50
8	90	$40.51	$9.80	$15.19	$0.00	$65.50

Effective Date - 03/01/2017

Step	percent	Apprentice Base Wage	Health	Pension	Supplemental Unemployment	Total Rate
1	50	$23.05	$9.80	$1.63	$0.00	$34.48
2	60	$27.65	$9.80	$1.63	$0.00	$39.08
3	70	$32.26	$9.80	$11.93	$0.00	$53.99
4	75	$34.57	$9.80	$11.93	$0.00	$56.30
5	80	$36.87	$9.80	$13.56	$0.00	$60.23
6	80	$36.87	$9.80	$13.56	$0.00	$60.23
7	90	$41.48	$9.80	$15.19	$0.00	$66.47
8	90	$41.48	$9.80	$15.19	$0.00	$66.47

Notes:

Apprentice to Journeyworker Ratio:1:5

CEMENT MASONRY/PLASTERING *BRICKLAYERS LOCAL 3 (NEW BEDFORD)*	01/01/2016	$46 44	$10 90	$18.71	$1.30	$77 35

Apprentice - *CEMENT MASONRY/PLASTERING Eastern Mass (New Bedford)*

Effective Date - 01/01/2016

Step	percent	Apprentice Base Wage	Health	Pension	Supplemental Unemployment	Total Rate
1	50	$23.22	$10.90	$12.21	$0.00	$46.33
2	60	$27.86	$10.90	$13.71	$1.30	$53.77
3	65	$30.19	$10.90	$14.71	$1.30	$57.10
4	70	$32.51	$10.90	$15.71	$1.30	$60.42
5	75	$34.83	$10.90	$16.71	$1.30	$63.74
6	80	$37.15	$10.90	$17.71	$1.30	$67.06
7	90	$41.80	$10.90	$18.71	$1.30	$72.71

Notes:

Steps 3,4 are 500 hrs. All other steps are 1,000 hrs.

Apprentice to Journeyworker Ratio:1:3

Classification	Effective Date	Base Wage	Health	Pension	Supplemental Unemployment	Total Rate
CHAIN SAW OPERATOR *LABORERS - ZONE 2*	06/01/2016	$31.90	$7.45	$12.65	$0.00	$52.00
	12/01/2016	$32 65	$7 45	$12.65	$0.00	$52 75
For apprentice rates see "Apprentice- LABORER"						
CLAM SHELLS/SLURRY BUCKETS/HEADING MACHINES *OPERATING ENGINEERS LOCAL 4*	06/01/2016	$45.23	$10.00	$15.15	$0.00	$70.38
	12/01/2016	$46.48	$10.00	$15.15	$0.00	$71.63
	06/01/2017	$47.48	$10.00	$15.15	$0.00	$72.63
	12/01/2017	$48.48	$10.00	$15.15	$0 00	$73.63
For apprentice rates see "Apprentice- OPERATING ENGINEERS"						
COMPRESSOR OPERATOR *OPERATING ENGINEERS LOCAL 4*	06/01/2016	$30.40	$10.00	$15.15	$0.00	$55.55
	12/01/2016	$31.27	$10.00	$15.15	$0.00	$56.42
	06/01/2017	$31.96	$10.00	$15.15	$0.00	$57.11
	12/01/2017	$32.65	$10.00	$15.15	$0.00	$57.80
For apprentice rates see "Apprentice- OPERATING ENGINEERS"						
DELEADER (BRIDGE) *PAINTERS LOCAL 35 - ZONE 2*	07/01/2016	$50.46	$7.85	$16.10	$0.00	$74.41
	01/01/2017	$51.41	$7.85	$16.10	$0.00	$75.36

Apprentice - *PAINTER Local 35 - BRIDGES/TANKS*

Effective Date - 07/01/2016

Step	percent	Apprentice Base Wage	Health	Pension	Supplemental Unemployment	Total Rate
1	50	$25.23	$7.85	$0.00	$0.00	$33.08
2	55	$27.75	$7.85	$3.66	$0.00	$39.26
3	60	$30.28	$7.85	$3.99	$0.00	$42.12
4	65	$32.80	$7.85	$4.32	$0.00	$44.97
5	70	$35.32	$7.85	$14.11	$0.00	$57.28
6	75	$37.85	$7.85	$14.44	$0.00	$60.14
7	80	$40.37	$7.85	$14.77	$0.00	$62.99
8	90	$45.41	$7.85	$15.44	$0.00	$68.70

Effective Date - 01/01/2017

Step	percent	Apprentice Base Wage	Health	Pension	Supplemental Unemployment	Total Rate
1	50	$25.71	$7.85	$0.00	$0.00	$33.56
2	55	$28.28	$7.85	$3.66	$0.00	$39.79
3	60	$30.85	$7.85	$3.99	$0.00	$42.69
4	65	$33.42	$7.85	$4.32	$0.00	$45.59
5	70	$35.99	$7.85	$14.11	$0.00	$57.95
6	75	$38.56	$7.85	$14.44	$0.00	$60.85
7	80	$41.13	$7.85	$14.77	$0.00	$63.75
8	90	$46 27	$7 85	$15 44	$0 00	$69 56

Notes:

Steps are 750 hrs.

Apprentice to Journeyworker Ratio:1:1

DEMO: ADZEMAN *LABORERS - ZONE 2*	12/01/2015	$35.50	$7.45	$13.55	$0.00	$56.50
For apprentice rates see "Apprentice- LABORER"						

Classification	Effective Date	Base Wage	Health	Pension	Supplemental Unemployment	Total Rate
DEMO: BACKHOE/LOADER/HAMMER OPERATOR *LABORERS - ZONE 2* For apprentice rates see "Apprentice- LABORER"	12/01/2015	$36.50	$7.45	$13.55	$0.00	$57.50
DEMO: BURNERS *LABORERS - ZONE 2* For apprentice rates see "Apprentice- LABORER"	12/01/2015	$36.25	$7.45	$13.55	$0.00	$57.25
DEMO: CONCRETE CUTTER/SAWYER *LABORERS - ZONE 2* For apprentice rates see "Apprentice- LABORER"	12/01/2015	$36.50	$7.45	$13.55	$0.00	$57.50
DEMO: JACKHAMMER OPERATOR *LABORERS - ZONE 2* For apprentice rates see "Apprentice- LABORER"	12/01/2015	$36.25	$7.45	$13.55	$0.00	$57.25
DEMO: WRECKING LABORER *LABORERS - ZONE 2* For apprentice rates see "Apprentice- LABORER"	12/01/2015	$35.50	$7.45	$13.55	$0.00	$56.50
DIRECTIONAL DRILL MACHINE OPERATOR *OPERATING ENGINEERS LOCAL 4*	06/01/2016	$43.81	$10.00	$15.15	$0.00	$68.96
	12/01/2016	$45.04	$10.00	$15.15	$0.00	$70.19
	06/01/2017	$46.03	$10.00	$15.15	$0.00	$71.18
	12/01/2017	$47.02	$10.00	$15.15	$0.00	$72.17
For apprentice rates see "Apprentice- OPERATING ENGINEERS"						
DIVER *PILE DRIVER LOCAL 56 (ZONE 1)* For apprentice rates see "Apprentice- PILE DRIVER"	08/01/2015	$58.86	$9.80	$19.23	$0.00	$87.89
DIVER TENDER *PILE DRIVER LOCAL 56 (ZONE 1)* For apprentice rates see "Apprentice- PILE DRIVER"	08/01/2015	$42.04	$9.80	$19.23	$0.00	$71.07
DIVER TENDER (EFFLUENT) *PILE DRIVER LOCAL 56 (ZONE 1)* For apprentice rates see "Apprentice- PILE DRIVER"	08/01/2015	$63.06	$9.80	$19.23	$0.00	$92.09
DIVER/SLURRY (EFFLUENT) *PILE DRIVER LOCAL 56 (ZONE 1)* For apprentice rates see "Apprentice- PILE DRIVER"	08/01/2015	$88.23	$9.80	$19.23	$0.00	$117.26
ELECTRICIAN *ELECTRICIANS LOCAL 223*	09/01/2016	$39.21	$8.90	$11.51	$0.00	$59.62

Classification	Effective Date	Base Wage	Health	Pension	Supplemental Unemployment	Total Rate

Apprentice - *ELECTRICIAN - Local 223*

Effective Date - 09/01/2016

Step	percent	Apprentice Base Wage	Health	Pension	Supplemental Unemployment	Total Rate
1	40	$15.68	$0.00	$0.47	$0.00	$16.15
2	42	$16.47	$0.00	$0.49	$0.00	$16.96
3	45	$17.64	$8.90	$0.53	$0.00	$27.07
4	48	$18.82	$8.90	$3.42	$0.00	$31.14
5	50	$19.61	$8.90	$3.55	$0.00	$32.06
6	55	$21.57	$8.90	$3.83	$0.00	$34.30
7	60	$23.53	$8.90	$4.12	$0.00	$36.55
8	65	$25.49	$8.90	$4.39	$0.00	$38.78
9	70	$27.45	$8.90	$4.68	$0.00	$41.03
10	75	$29.41	$8.90	$4.96	$0.00	$43.27

Notes:

Steps are 750 hours

Apprentice to Journeyworker Ratio:2:3***

ELEVATOR CONSTRUCTOR *ELEVATOR CONSTRUCTORS LOCAL 4*	01/01/2016	$54.53	$14.43	$14.96	$0.00	$83.92
	01/01/2017	$55.86	$15.28	$15.71	$0.00	$86.85

Apprentice - *ELEVATOR CONSTRUCTOR - Local 4*

Effective Date - 01/01/2016

Step	percent	Apprentice Base Wage	Health	Pension	Supplemental Unemployment	Total Rate
1	50	$27.27	$14.43	$0.00	$0.00	$41.70
2	55	$29.99	$14.43	$14.96	$0.00	$59.38
3	65	$35.44	$14.43	$14.96	$0.00	$64.83
4	70	$38.17	$14.43	$14.96	$0.00	$67.56
5	80	$43.62	$14.43	$14.96	$0.00	$73.01

Effective Date - 01/01/2017

Step	percent	Apprentice Base Wage	Health	Pension	Supplemental Unemployment	Total Rate
1	50	$27.93	$15.28	$0.00	$0.00	$43.21
2	55	$30.72	$15.28	$15.71	$0.00	$61.71
3	65	$36.31	$15.28	$15.71	$0.00	$67.30
4	70	$39.10	$15.28	$15.71	$0.00	$70.09
5	80	$44.69	$15.28	$15.71	$0.00	$75.68

Notes:

Steps 1-2 are 6 mos.; Steps 3-5 are 1 year

Apprentice to Journeyworker Ratio:1:1

ELEVATOR CONSTRUCTOR HELPER *ELEVATOR CONSTRUCTORS LOCAL 4*	01/01/2016	$38.17	$14.43	$14.96	$0.00	$67.56
	01/01/2017	$39.10	$15.28	$15.71	$0.00	$70.09

For apprentice rates see "Apprentice - ELEVATOR CONSTRUCTOR"

Classification	Effective Date	Base Wage	Health	Pension	Supplemental Unemployment	Total Rate
FENCE & GUARD RAIL ERECTOR *LABORERS - ZONE 2*	06/01/2016	$31.90	$7.45	$12.65	$0.00	$52.00
	12/01/2016	$32.65	$7.45	$12.65	$0.00	$52.75
For apprentice rates see "Apprentice- LABORER"						
FIELD ENG.INST.PERSON-BLDG,SITE,HVY/HWY *OPERATING ENGINEERS LOCAL 4*	05/01/2016	$41.03	$10.00	$14.90	$0.00	$65.93
	11/01/2016	$41.37	$10.00	$15.15	$0.00	$66.52
	05/01/2017	$42.25	$10.00	$15.15	$0.00	$67.40
	11/01/2017	$42.98	$10.00	$15.15	$0.00	$68.13
	05/01/2018	$43.69	$10.00	$15.15	$0.00	$68.84
For apprentice rates see "Apprentice- OPERATING ENGINEERS"						
FIELD ENG.PARTY CHIEF-BLDG,SITE,HVY/HWY *OPERATING ENGINEERS LOCAL 4*	05/01/2016	$42.47	$10.00	$14.90	$0.00	$67.37
	11/01/2016	$42.82	$10.00	$15.15	$0.00	$67.97
	05/01/2017	$43.71	$10.00	$15.15	$0.00	$68.86
	11/01/2017	$44.44	$10.00	$15.15	$0.00	$69.59
	05/01/2018	$45.16	$10.00	$15.15	$0.00	$70.31
For apprentice rates see "Apprentice- OPERATING ENGINEERS"						
FIELD ENG.ROD PERSON-BLDG,SITE,HVY/HWY *OPERATING ENGINEERS LOCAL 4*	05/01/2016	$21.88	$10.00	$14.90	$0.00	$46.78
	11/01/2016	$21.98	$10.00	$15.15	$0.00	$47.13
	05/01/2017	$22.51	$10.00	$15.15	$0.00	$47.66
	11/01/2017	$22.93	$10.00	$15.15	$0.00	$48.08
	05/01/2018	$23.36	$10.00	$15.15	$0.00	$48.51
For apprentice rates see "Apprentice- OPERATING ENGINEERS"						
FIRE ALARM INSTALLER *ELECTRICIANS LOCAL 223*	09/01/2016	$39.21	$8.90	$11.51	$0.00	$59.62
For apprentice rates see "Apprentice- ELECTRICIAN"						
FIRE ALARM REPAIR / MAINTENANCE / COMMISSIONING*ELECTRICIANS LOCAL 223*	09/01/2016	$33.33	$8.90	$9.78	$0.00	$52.01
For apprentice rates see "Apprentice- TELECOMMUNICATIONS TECHNICIAN"						
FIREMAN (ASST. ENGINEER) *OPERATING ENGINEERS LOCAL 4*	06/01/2016	$36.71	$10.00	$15.15	$0.00	$61.86
	12/01/2016	$37.75	$10.00	$15.15	$0.00	$62.90
	06/01/2017	$38.59	$10.00	$15.15	$0.00	$63.74
	12/01/2017	$39.42	$10.00	$15.15	$0.00	$64.57
For apprentice rates see "Apprentice- OPERATING ENGINEERS"						
FLAGGER & SIGNALER *LABORERS - ZONE 2*	06/01/2016	$20.50	$7.45	$12.65	$0.00	$40.60
	12/01/2016	$20.50	$7.45	$12.65	$0.00	$40.60
For apprentice rates see "Apprentice- LABORER"						
FLOORCOVERER *FLOORCOVERERS LOCAL 2168 ZONE I*	03/01/2016	$42.13	$9.80	$17.62	$0.00	$69.55

Classification	Effective Date	Base Wage	Health	Pension	Supplemental Unemployment	Total Rate

Apprentice - *FLOORCOVERER - Local 2168 Zone I*

Effective Date - 03/01/2016

Step	percent	Apprentice Base Wage	Health	Pension	Supplemental Unemployment	Total Rate
1	50	$21.07	$9.80	$1.79	$0.00	$32.66
2	55	$23.17	$9.80	$1.79	$0.00	$34.76
3	60	$25.28	$9.80	$12.25	$0.00	$47.33
4	65	$27.38	$9.80	$12.25	$0.00	$49.43
5	70	$29.49	$9.80	$14.04	$0.00	$53.33
6	75	$31.60	$9.80	$14.04	$0.00	$55.44
7	80	$33.70	$9.80	$15.83	$0.00	$59.33
8	85	$35.81	$9.80	$15.83	$0.00	$61.44

Notes:

Steps are 750 hrs.

Apprentice to Journeyworker Ratio:1:1

FORK LIFT/CHERRY PICKER *OPERATING ENGINEERS LOCAL 4*	06/01/2016	$44.23	$10.00	$15.15	$0.00	$69.38
	12/01/2016	$45.48	$10.00	$15.15	$0.00	$70.63
	06/01/2017	$46.48	$10.00	$15.15	$0.00	$71.63
	12/01/2017	$47.48	$10.00	$15.15	$0.00	$72.63
For apprentice rates see "Apprentice- OPERATING ENGINEERS"						
GENERATOR/LIGHTING PLANT/HEATERS *OPERATING ENGINEERS LOCAL 4*	06/01/2016	$30.40	$10.00	$15.15	$0.00	$55.55
	12/01/2016	$31.27	$10.00	$15.15	$0.00	$56.42
	06/01/2017	$31.96	$10.00	$15.15	$0.00	$57.11
	12/01/2017	$32.65	$10.00	$15.15	$0.00	$57.80
For apprentice rates see "Apprentice- OPERATING ENGINEERS"						
GLAZIER (GLASS PLANK/AIR BARRIER/INTERIOR SYSTEMS) *GLAZIERS LOCAL 1333*	06/01/2016	$35.58	$10.70	$8.25	$0.00	$54.53

Classification	Effective Date	Base Wage	Health	Pension	Supplemental Unemployment	Total Rate

Apprentice - *GLAZIER - Local 1333*

Effective Date - 06/01/2016

Step	percent	Apprentice Base Wage	Health	Pension	Supplemental Unemployment	Total Rate
1	50	$17.79	$10.70	$1.00	$0.00	$29.49
2	56	$20.01	$10.70	$1.00	$0.00	$31.71
3	63	$22.24	$10.70	$1.50	$0.00	$34.44
4	69	$24.46	$10.70	$1.50	$0.00	$36.66
5	75	$26.69	$10.70	$2.00	$0.00	$39.39
6	81	$28.91	$10.70	$2.00	$0.00	$41.61
7	88	$31.13	$10.70	$8.00	$0.00	$49.83
8	94	$33.36	$10.70	$8.00	$0.00	$52.06

Notes:

Apprentice to Journeyworker Ratio:1:3

HOISTING ENGINEER/CRANES/GRADALLS *OPERATING ENGINEERS LOCAL 4*	06/01/2016	$44.23	$10.00	$15.15	$0.00	$69.38
	12/01/2016	$45.48	$10.00	$15.15	$0.00	$70.63
	06/01/2017	$46.48	$10.00	$15.15	$0.00	$71.63
	12/01/2017	$47.48	$10.00	$15.15	$0.00	$72.63

Classification	Effective Date	Base Wage	Health	Pension	Supplemental Unemployment	Total Rate

Apprentice - *OPERATING ENGINEERS - Local 4*

Effective Date - 06/01/2016

Step	percent	Apprentice Base Wage	Health	Pension	Supplemental Unemployment	Total Rate
1	55	$24.33	$10.00	$0.00	$0.00	$34.33
2	60	$26.54	$10.00	$15.15	$0.00	$51.69
3	65	$28.75	$10.00	$15.15	$0.00	$53.90
4	70	$30.96	$10.00	$15.15	$0.00	$56.11
5	75	$33.17	$10.00	$15.15	$0.00	$58.32
6	80	$35.38	$10.00	$15.15	$0.00	$60.53
7	85	$37.60	$10.00	$15.15	$0.00	$62.75
8	90	$39.81	$10.00	$15.15	$0.00	$64.96

Effective Date - 12/01/2016

Step	percent	Apprentice Base Wage	Health	Pension	Supplemental Unemployment	Total Rate
1	55	$25.01	$10.00	$0.00	$0.00	$35.01
2	60	$27.29	$10.00	$15.15	$0.00	$52.44
3	65	$29.56	$10.00	$15.15	$0.00	$54.71
4	70	$31.84	$10.00	$15.15	$0.00	$56.99
5	75	$34.11	$10.00	$15.15	$0.00	$59.26
6	80	$36.38	$10.00	$15.15	$0.00	$61.53
7	85	$38.66	$10.00	$15.15	$0.00	$63.81
8	90	$40.93	$10.00	$15.15	$0.00	$66.08

Notes:

Apprentice to Journeyworker Ratio:1:6

HVAC (DUCTWORK) *SHEETMETAL WORKERS LOCAL 17 - B*	04/01/2016	$35 60	$10 70	$14.79	$1.83	$62 92
For apprentice rates see "Apprentice- SHEET METAL WORKER"						
HVAC (ELECTRICAL CONTROLS) *ELECTRICIANS LOCAL 223*	09/01/2016	$39.21	$8.90	$11.51	$0.00	$59.62
For apprentice rates see "Apprentice- ELECTRICIAN"						
HVAC (TESTING AND BALANCING - AIR) *SHEETMETAL WORKERS LOCAL 17 - B*	04/01/2016	$35.60	$10.70	$14.79	$1.83	$62.92
For apprentice rates see "Apprentice- SHEET METAL WORKER"						
HVAC (TESTING AND BALANCING -WATER) *PLUMBERS & PIPEFITTERS LOCAL 51*	03/01/2016	$37.38	$11.00	$16.10	$0 00	$64.48
For apprentice rates see "Apprentice- PIPEFITTER" or "PLUMBER/PIPEFITTER"						
HVAC MECHANIC *PLUMBERS & PIPEFITTERS LOCAL 51*	03/01/2016	$37.38	$11.00	$16.10	$0.00	$64.48
For apprentice rates see "Apprentice- PIPEFITTER" or "PLUMBER/PIPEFITTER"						
HYDRAULIC DRILLS *LABORERS - ZONE 2*	06/01/2016	$32 40	$7 45	$12.65	$0.00	$52 50
	12/01/2016	$33.15	$7.45	$12.65	$0.00	$53.25
For apprentice rates see "Apprentice- LABORER"						

Classification	Effective Date	Base Wage	Health	Pension	Supplemental Unemployment	Total Rate
INSULATOR (PIPES & TANKS) *HEAT & FROST INSULATORS LOCAL 6 (SOUTHERN MASS)*	09/01/2016	$40.58	$11.75	$14.20	$0.00	$66.53
	09/01/2017	$42.38	$11.75	$14.20	$0.00	$68.33
	09/01/2018	$44.40	$11.75	$14.20	$0.00	$70.35
	09/01/2019	$46.65	$11.75	$14.20	$0.00	$72.60

Apprentice - *ASBESTOS INSULATOR (Pipes & Tanks) - Local 6 Southern MA*

Effective Date - 09/01/2016

Step	percent	Apprentice Base Wage	Health	Pension	Supplemental Unemployment	Total Rate
1	50	$20.29	$11.75	$10.45	$0.00	$42.49
2	60	$24.35	$11.75	$11.20	$0.00	$47.30
3	70	$28.41	$11.75	$11.95	$0.00	$52.11
4	80	$32.46	$11.75	$12.70	$0.00	$56.91

Effective Date - 09/01/2017

Step	percent	Apprentice Base Wage	Health	Pension	Supplemental Unemployment	Total Rate
1	50	$21.19	$11.75	$10.45	$0.00	$43.39
2	60	$25.43	$11.75	$11.20	$0.00	$48.38
3	70	$29.67	$11.75	$11.95	$0.00	$53.37
4	80	$33.90	$11.75	$12.70	$0.00	$58.35

Notes:

Steps are 1 year

Apprentice to Journeyworker Ratio:1:4

IRONWORKER/WELDER *IRONWORKERS LOCAL 37*	03/16/2016	$34 71	$7 70	$16.00	$0.00	$58 41

Apprentice - *IRONWORKER Local 37*

Effective Date - 03/16/2016

Step	percent	Apprentice Base Wage	Health	Pension	Supplemental Unemployment	Total Rate
1	70	$24.30	$7.70	$16.00	$0.00	$48.00
2	75	$26.03	$7.70	$16.00	$0.00	$49.73
3	80	$27.77	$7.70	$16.00	$0.00	$51.47
4	85	$29.50	$7.70	$16.00	$0.00	$53.20
5	90	$31.24	$7.70	$16.00	$0.00	$54.94
6	95	$32.97	$7.70	$16.00	$0.00	$56.67

Notes:

Apprentice to Journeyworker Ratio:1:4

JACKHAMMER & PAVING BREAKER OPERATOR *LABORERS - ZONE 2*	06/01/2016	$31.90	$7.45	$12.65	$0.00	$52.00
	12/01/2016	$32.65	$7.45	$12.65	$0.00	$52.75
For apprentice rates see "Apprentice- LABORER"						
LABORER *LABORERS - ZONE 2*	06/01/2016	$31.65	$7.45	$12.65	$0.00	$51.75
	12/01/2016	$32.40	$7.45	$12.65	$0.00	$52.50

Classification	Effective Date	Base Wage	Health	Pension	Supplemental Unemployment	Total Rate

Apprentice - *LABORER - Zone 2*

Effective Date - 06/01/2016

Step	percent	Apprentice Base Wage	Health	Pension	Supplemental Unemployment	Total Rate
1	60	$18.99	$7.45	$12.65	$0.00	$39.09
2	70	$22.16	$7.45	$12.65	$0.00	$42.26
3	80	$25.32	$7.45	$12.65	$0.00	$45.42
4	90	$28.49	$7.45	$12.65	$0.00	$48.59

Effective Date - 12/01/2016

Step	percent	Apprentice Base Wage	Health	Pension	Supplemental Unemployment	Total Rate
1	60	$19.44	$7.45	$12.65	$0.00	$39.54
2	70	$22.68	$7.45	$12.65	$0.00	$42.78
3	80	$25.92	$7.45	$12.65	$0.00	$46.02
4	90	$29.16	$7.45	$12.65	$0.00	$49.26

Notes:

Apprentice to Journeyworker Ratio:1:5

LABORER: CARPENTER TENDER *LABORERS - ZONE 2*	06/01/2016	$31.65	$7.45	$12.65	$0.00	$51.75
	12/01/2016	$32.40	$7.45	$12.65	$0.00	$52.50
For apprentice rates see "Apprentice- LABORER"						
LABORER: CEMENT FINISHER TENDER *LABORERS - ZONE 2*	06/01/2016	$31.65	$7.45	$12.65	$0.00	$51.75
	12/01/2016	$32.40	$7.45	$12.65	$0.00	$52.50
For apprentice rates see "Apprentice- LABORER"						
LABORER: HAZARDOUS WASTE/ASBESTOS REMOVER *LABORERS - ZONE 2*	12/01/2015	$31.35	$7.45	$12.60	$0.00	$51.40
For apprentice rates see "Apprentice- LABORER"						
LABORER: MASON TENDER *LABORERS - ZONE 2*	06/01/2016	$31 90	$7 45	$12.65	$0.00	$52 00
	12/01/2016	$32.65	$7.45	$12.65	$0.00	$52.75
For apprentice rates see "Apprentice- LABORER"						
LABORER: MULTI-TRADE TENDER *LABORERS ZONE 2*	06/01/2016	$31.65	$7.45	$12.65	$0.00	$51.75
	12/01/2016	$32.40	$7.45	$12.65	$0.00	$52.50
For apprentice rates see "Apprentice- LABORER"						
LABORER: TREE REMOVER *LABORERS - ZONE 2*	06/01/2016	$31 65	$7 45	$12.65	$0.00	$51 75
	12/01/2016	$32.40	$7.45	$12.65	$0.00	$52.50
This classification applies to all tree work associated with the removal of standing trees, and trimming and removal of branches and limbs when the work is not done for a utility company for the purpose of operation, maintenance or repair of utility company equipment For apprentice rates see "Apprentice- LABORER"						
LASER BEAM OPERATOR *LABORERS - ZONE 2*	06/01/2016	$31.90	$7.45	$12 65	$0.00	$52.00
	12/01/2016	$32.65	$7.45	$12.65	$0.00	$52.75
For apprentice rates see "Apprentice- LABORER"						
MARBLE & TILE FINISHERS *BRICKLAYERS LOCAL 3 - MARBLE & TILE*	08/01/2016	$38.78	$10.18	$17.78	$0.00	$66.74
	02/01/2017	$39.24	$10.18	$17.78	$0.00	$67.20

Classification	Effective Date	Base Wage	Health	Pension	Supplemental Unemployment	Total Rate

Apprentice - *MARBLE & TILE FINISHER - Local 3 Marble & Tile*

Effective Date - 08/01/2016

Step	percent	Apprentice Base Wage	Health	Pension	Supplemental Unemployment	Total Rate
1	50	$19.39	$10.18	$17.78	$0.00	$47.35
2	60	$23.27	$10.18	$17.78	$0.00	$51.23
3	70	$27.15	$10.18	$17.78	$0.00	$55.11
4	80	$31.02	$10.18	$17.78	$0.00	$58.98
5	90	$34.90	$10.18	$17.78	$0.00	$62.86

Effective Date - 02/01/2017

Step	percent	Apprentice Base Wage	Health	Pension	Supplemental Unemployment	Total Rate
1	50	$19.62	$10.18	$17.78	$0.00	$47.58
2	60	$23.54	$10.18	$17.78	$0.00	$51.50
3	70	$27.47	$10.18	$17.78	$0.00	$55.43
4	80	$31.39	$10.18	$17.78	$0.00	$59.35
5	90	$35.32	$10.18	$17.78	$0.00	$63.28

Notes:

Apprentice to Journeyworker Ratio:1:3

MARBLE MASONS,TILELAYERS & TERRAZZO MECH *BRICKLAYERS LOCAL 3 - MARBLE & TILE*	08/01/2016	$50.80	$10.18	$19.22	$0 00	$80.20
	02/01/2017	$51.37	$10.18	$19.22	$0.00	$80.77

Apprentice - *MARBLE-TILE-TERRAZZO MECHANIC - Local 3 Marble & Tile*

Effective Date - 08/01/2016

Step	percent	Apprentice Base Wage	Health	Pension	Supplemental Unemployment	Total Rate
1	50	$25.40	$10.18	$19.22	$0.00	$54.80
2	60	$30.48	$10.18	$19.22	$0.00	$59.88
3	70	$35.56	$10.18	$19.22	$0.00	$64.96
4	80	$40.64	$10.18	$19.22	$0.00	$70.04
5	90	$45.72	$10.18	$19.22	$0.00	$75.12

Effective Date - 02/01/2017

Step	percent	Apprentice Base Wage	Health	Pension	Supplemental Unemployment	Total Rate
1	50	$25.69	$10.18	$19.22	$0.00	$55.09
2	60	$30.82	$10.18	$19.22	$0.00	$60.22
3	70	$35.96	$10.18	$19.22	$0.00	$65.36
4	80	$41.10	$10.18	$19.22	$0.00	$70.50
5	90	$46.23	$10.18	$19.22	$0.00	$75.63

Notes:

Apprentice to Journeyworker Ratio:1:5

Classification	Effective Date	Base Wage	Health	Pension	Supplemental Unemployment	Total Rate
MECH. SWEEPER OPERATOR (ON CONST. SITES) *OPERATING ENGINEERS LOCAL 4*	06/01/2016	$43.81	$10.00	$15.15	$0.00	$68.96
	12/01/2016	$45 04	$10 00	$15.15	$0.00	$70 19
	06/01/2017	$46.03	$10.00	$15.15	$0.00	$71.18
	12/01/2017	$47.02	$10.00	$15.15	$0.00	$72.17
For apprentice rates see Apprentice OPERATING ENGINEERS						
MECHANICS MAINTENANCE *OPERATING ENGINEERS LOCAL 4*	06/01/2016	$43.81	$10.00	$15.15	$0.00	$68.96
	12/01/2016	$45.04	$10.00	$15.15	$0 00	$70.19
	06/01/2017	$46.03	$10.00	$15.15	$0.00	$71.18
	12/01/2017	$47.02	$10.00	$15.15	$0.00	$72.17
For apprentice rates see "Apprentice- OPERATING ENGINEERS"						
MILLWRIGHT (Zone 2) *MILLWRIGHTS LOCAL 1121 - Zone 2*	04/01/2015	$34.69	$9.80	$16.21	$0.00	$60.70

Apprentice - *MILLWRIGHT - Local 1121 Zone 2*

Effective Date - 04/01/2015

Step	percent	Apprentice Base Wage	Health	Pension	Supplemental Unemployment	Total Rate
1	55	$19 08	$9 80	$4 48	$0 00	$33 36
2	65	$22.55	$9.80	$13.36	$0.00	$45.71
3	75	$26.02	$9.80	$14.18	$0.00	$50.00
4	85	$29.49	$9.80	$14.99	$0.00	$54.28

Notes:

Steps are 2,000 hours

Apprentice to Journeyworker Ratio:1:5

MORTAR MIXER *LABORERS - ZONE 2*	06/01/2016	$31.90	$7.45	$12.65	$0.00	$52.00
	12/01/2016	$32.65	$7.45	$12.65	$0.00	$52.75
For apprentice rates see "Apprentice- LABORER"						
OILER (OTHER THAN TRUCK CRANES,GRADALLS) *OPERATING ENGINEERS LOCAL 4*	06/01/2016	$22.41	$10.00	$15 15	$0.00	$47.56
	12/01/2016	$23.06	$10.00	$15.15	$0.00	$48.21
	06/01/2017	$23.57	$10.00	$15.15	$0.00	$48.72
	12/01/2017	$24.09	$10.00	$15.15	$0.00	$49.24
For apprentice rates see "Apprentice- OPERATING ENGINEERS"						
OILER (TRUCK CRANES, GRADALLS) *OPERATING ENGINEERS LOCAL 4*	06/01/2016	$26.29	$10.00	$15.15	$0.00	$51.44
	12/01/2016	$27.04	$10.00	$15.15	$0.00	$52.19
	06/01/2017	$27.64	$10.00	$15.15	$0.00	$52.79
	12/01/2017	$28 25	$10 00	$15.15	$0.00	$53 40
For apprentice rates see "Apprentice- OPERATING ENGINEERS"						
OTHER POWER DRIVEN EQUIPMENT - CLASS II *OPERATING ENGINEERS LOCAL 4*	06/01/2016	$43.81	$10.00	$15.15	$0.00	$68.96
	12/01/2016	$45.04	$10.00	$15.15	$0.00	$70.19
	06/01/2017	$46.03	$10.00	$15.15	$0.00	$71.18
	12/01/2017	$47.02	$10.00	$15.15	$0 00	$72.17
For apprentice rates see "Apprentice- OPERATING ENGINEERS"						
PAINTER (BRIDGES/TANKS) *PAINTERS LOCAL 35 - ZONE 2*	07/01/2016	$50.46	$7.85	$16.10	$0.00	$74.41
	01/01/2017	$51.41	$7.85	$16.10	$0.00	$75.36

Classification	Effective Date	Base Wage	Health	Pension	Supplemental Unemployment	Total Rate

Apprentice - *PAINTER Local 35 - BRIDGES/TANKS*

Effective Date - 07/01/2016

Step	percent	Apprentice Base Wage	Health	Pension	Supplemental Unemployment	Total Rate
1	50	$25.23	$7.85	$0.00	$0.00	$33.08
2	55	$27.75	$7.85	$3.66	$0.00	$39.26
3	60	$30.28	$7.85	$3.99	$0.00	$42.12
4	65	$32.80	$7.85	$4.32	$0.00	$44.97
5	70	$35.32	$7.85	$14.11	$0.00	$57.28
6	75	$37.85	$7.85	$14.44	$0.00	$60.14
7	80	$40.37	$7.85	$14.77	$0.00	$62.99
8	90	$45.41	$7.85	$15.44	$0.00	$68.70

Effective Date - 01/01/2017

Step	percent	Apprentice Base Wage	Health	Pension	Supplemental Unemployment	Total Rate
1	50	$25.71	$7.85	$0.00	$0.00	$33.56
2	55	$28.28	$7.85	$3.66	$0.00	$39.79
3	60	$30.85	$7.85	$3.99	$0.00	$42.69
4	65	$33.42	$7.85	$4.32	$0.00	$45.59
5	70	$35.99	$7.85	$14.11	$0.00	$57.95
6	75	$38.56	$7.85	$14.44	$0.00	$60.85
7	80	$41.13	$7.85	$14.77	$0.00	$63.75
8	90	$46.27	$7.85	$15.44	$0.00	$69.56

Notes:

Steps are 750 hrs.

Apprentice to Journeyworker Ratio:1:1

PAINTER (SPRAY OR SANDBLAST, NEW) *	07/01/2016	$41 36	$7 85	$16.10	$0.00	$65 31
* If 30% or more of surfaces to be painted are new construction, NEW paint rate shall be used.*PAINTERS LOCAL 35 - ZONE 2*	01/01/2017	$42.31	$7.85	$16.10	$0.00	$66.26

Classification	Effective Date	Base Wage	Health	Pension	Supplemental Unemployment	Total Rate

Apprentice - *PAINTER Local 35 Zone 2 - Spray/Sandblast - New*

Effective Date - 07/01/2016

Step	percent	Apprentice Base Wage	Health	Pension	Supplemental Unemployment	Total Rate
1	50	$20.68	$7.85	$0.00	$0.00	$28.53
2	55	$22.75	$7.85	$3.66	$0.00	$34.26
3	60	$24.82	$7.85	$3.99	$0.00	$36.66
4	65	$26.88	$7.85	$4.32	$0.00	$39.05
5	70	$28.95	$7.85	$14.11	$0.00	$50.91
6	75	$31.02	$7.85	$14.44	$0.00	$53.31
7	80	$33.09	$7.85	$14.77	$0.00	$55.71
8	90	$37.22	$7.85	$15.44	$0.00	$60.51

Effective Date - 01/01/2017

Step	percent	Apprentice Base Wage	Health	Pension	Supplemental Unemployment	Total Rate
1	50	$21.16	$7.85	$0.00	$0.00	$29.01
2	55	$23.27	$7.85	$3.66	$0.00	$34.78
3	60	$25.39	$7.85	$3.99	$0.00	$37.23
4	65	$27.50	$7.85	$4.32	$0.00	$39.67
5	70	$29.62	$7.85	$14.11	$0.00	$51.58
6	75	$31.73	$7.85	$14.44	$0.00	$54.02
7	80	$33.85	$7.85	$14.77	$0.00	$56.47
8	90	$38.08	$7.85	$15.44	$0.00	$61.37

Notes:

Steps are 750 hrs.

Apprentice to Journeyworker Ratio:1:1

PAINTER (SPRAY OR SANDBLAST, REPAINT) *PAINTERS LOCAL 35 - ZONE 2*	07/01/2016	$39 42	$7 85	$16.10	$0.00	$63 37
	01/01/2017	$40.37	$7.85	$16.10	$0.00	$64.32

Classification	Effective Date	Base Wage	Health	Pension	Supplemental Unemployment	Total Rate

Apprentice - *PAINTER Local 35 Zone 2 - Spray/Sandblast - Repaint*

Effective Date - 07/01/2016

Step	percent	Apprentice Base Wage	Health	Pension	Supplemental Unemployment	Total Rate
1	50	$19.71	$7.85	$0.00	$0.00	$27.56
2	55	$21.68	$7.85	$3.66	$0.00	$33.19
3	60	$23.65	$7.85	$3.99	$0.00	$35.49
4	65	$25.62	$7.85	$4.32	$0.00	$37.79
5	70	$27.59	$7.85	$14.11	$0.00	$49.55
6	75	$29.57	$7.85	$14.44	$0.00	$51.86
7	80	$31.54	$7.85	$14.77	$0.00	$54.16
8	90	$35.48	$7.85	$15.44	$0.00	$58.77

Effective Date - 01/01/2017

Step	percent	Apprentice Base Wage	Health	Pension	Supplemental Unemployment	Total Rate
1	50	$20.19	$7.85	$0.00	$0.00	$28.04
2	55	$22.20	$7.85	$3.66	$0.00	$33.71
3	60	$24.22	$7.85	$3.99	$0.00	$36.06
4	65	$26.24	$7.85	$4.32	$0.00	$38.41
5	70	$28.26	$7.85	$14.11	$0.00	$50.22
6	75	$30.28	$7.85	$14.44	$0.00	$52.57
7	80	$32.30	$7.85	$14.77	$0.00	$54.92
8	90	$36.33	$7.85	$15.44	$0.00	$59.62

Notes:

Steps are 750 hrs.

Apprentice to Journeyworker Ratio:1:1

PAINTER (TRAFFIC MARKINGS) *LABORERS - ZONE 2*	06/01/2016	$31 65	$7 45	$12.65	$0.00	$51 75
	12/01/2016	$32.40	$7.45	$12.65	$0.00	$52.50
For Apprentice rates see "Apprentice- LABORER"						
PAINTER / TAPER (BRUSH, NEW) * * If 30% or more of surfaces to be painted are new construction, NEW paint rate shall be used.*PAINTERS LOCAL 35 - ZONE 2*	07/01/2016	$39.96	$7.85	$16.10	$0.00	$63.91
	01/01/2017	$40.91	$7.85	$16.10	$0.00	$64.86

Classification	Effective Date	Base Wage	Health	Pension	Supplemental Unemployment	Total Rate

Apprentice - *PAINTER - Local 35 Zone 2 - BRUSH NEW*

Effective Date - 07/01/2016

Step	percent	Apprentice Base Wage	Health	Pension	Supplemental Unemployment	Total Rate
1	50	$19.98	$7.85	$0.00	$0.00	$27.83
2	55	$21.98	$7.85	$3.66	$0.00	$33.49
3	60	$23.98	$7.85	$3.99	$0.00	$35.82
4	65	$25.97	$7.85	$4.32	$0.00	$38.14
5	70	$27.97	$7.85	$14.11	$0.00	$49.93
6	75	$29.97	$7.85	$14.44	$0.00	$52.26
7	80	$31.97	$7.85	$14.77	$0.00	$54.59
8	90	$35.96	$7.85	$15.44	$0.00	$59.25

Effective Date - 01/01/2017

Step	percent	Apprentice Base Wage	Health	Pension	Supplemental Unemployment	Total Rate
1	50	$20.46	$7.85	$0.00	$0.00	$28.31
2	55	$22.50	$7.85	$3.66	$0.00	$34.01
3	60	$24.55	$7.85	$3.99	$0.00	$36.39
4	65	$26.59	$7.85	$4.32	$0.00	$38.76
5	70	$28.64	$7.85	$14.11	$0.00	$50.60
6	75	$30.68	$7.85	$14.44	$0.00	$52.97
7	80	$32.73	$7.85	$14.77	$0.00	$55.35
8	90	$36.82	$7.85	$15.44	$0.00	$60.11

Notes:

Steps are 750 hrs.

Apprentice to Journeyworker Ratio:1:1

PAINTER / TAPER (BRUSH, REPAINT) *PAINTERS LOCAL 35 - ZONE 2*	07/01/2016	$38 02	$7 85	$16.10	$0.00	$61 97
	01/01/2017	$38.97	$7.85	$16.10	$0.00	$62.92

Classification	Effective Date	Base Wage	Health	Pension	Supplemental Unemployment	Total Rate

Apprentice - *PAINTER Local 35 Zone 2 - BRUSH REPAINT*

Effective Date - 07/01/2016

Step	percent	Apprentice Base Wage	Health	Pension	Supplemental Unemployment	Total Rate
1	50	$19.01	$7.85	$0.00	$0.00	$26.86
2	55	$20.91	$7.85	$3.66	$0.00	$32.42
3	60	$22.81	$7.85	$3.99	$0.00	$34.65
4	65	$24.71	$7.85	$4.32	$0.00	$36.88
5	70	$26.61	$7.85	$14.11	$0.00	$48.57
6	75	$28.52	$7.85	$14.44	$0.00	$50.81
7	80	$30.42	$7.85	$14.77	$0.00	$53.04
8	90	$34.22	$7.85	$15.44	$0.00	$57.51

Effective Date - 01/01/2017

Step	percent	Apprentice Base Wage	Health	Pension	Supplemental Unemployment	Total Rate
1	50	$19.49	$7.85	$0.00	$0.00	$27.34
2	55	$21.43	$7.85	$3.66	$0.00	$32.94
3	60	$23.38	$7.85	$3.99	$0.00	$35.22
4	65	$25.33	$7.85	$4.32	$0.00	$37.50
5	70	$27.28	$7.85	$14.11	$0.00	$49.24
6	75	$29.23	$7.85	$14.44	$0.00	$51.52
7	80	$31.18	$7.85	$14.77	$0.00	$53.80
8	90	$35.07	$7.85	$15.44	$0.00	$58.36

Notes:

Steps are 750 hrs.

Apprentice to Journeyworker Ratio:1:1

PANEL & PICKUP TRUCKS DRIVER *TEAMSTERS JOINT COUNCIL NO. 10 ZONE B*	12/01/2012	$30 28	$9 07	$8.00	$0.00	$47 35
PIER AND DOCK CONSTRUCTOR (UNDERPINNING AND DECK) *PILE DRIVER LOCAL 56 (ZONE 1)* For apprentice rates see "Apprentice- PILE DRIVER"	08/01/2015	$42.04	$9.80	$19.23	$0.00	$71.07
PILE DRIVER *PILE DRIVER LOCAL 56 (ZONE 1)*	08/01/2015	$42.04	$9.80	$19.23	$0.00	$71.07

Classification	Effective Date	Base Wage	Health	Pension	Supplemental Unemployment	Total Rate

Apprentice - *PILE DRIVER - Local 56 Zone 1*

Effective Date - 08/01/2015

Step	percent	Apprentice Base Wage	Health	Pension	Supplemental Unemployment	Total Rate
1	50	$21.02	$9.80	$19.23	$0.00	$50.05
2	60	$25.22	$9.80	$19.23	$0.00	$54.25
3	70	$29.43	$9.80	$19.23	$0.00	$58.46
4	75	$31.53	$9.80	$19.23	$0.00	$60.56
5	80	$33.63	$9.80	$19.23	$0.00	$62.66
6	80	$33.63	$9.80	$19.23	$0.00	$62.66
7	90	$37.84	$9.80	$19.23	$0.00	$66.87
8	90	$37.84	$9.80	$19.23	$0.00	$66.87

Notes:

Apprentice to Journeyworker Ratio:1:3

PIPELAYER *LABORERS - ZONE 2*	06/01/2016	$31.90	$7.45	$12.65	$0.00	$52.00
	12/01/2016	$32.65	$7.45	$12.65	$0.00	$52.75
For apprentice rates see "Apprentice- LABORER"						
PLUMBER & PIPEFITTER *PLUMBERS & PIPEFITTERS LOCAL 51*	03/01/2016	$37.38	$11.00	$16.10	$0 00	$64.48

Apprentice - *PLUMBER/PIPEFITTER - Local 51*

Effective Date - 03/01/2016

Step	percent	Apprentice Base Wage	Health	Pension	Supplemental Unemployment	Total Rate
1	40	$14.95	$11.00	$1.50	$0.00	$27.45
2	50	$18.69	$11.00	$1.50	$0.00	$31.19
3	60	$22.43	$11.00	$7.85	$0.00	$41.28
4	70	$26.17	$11.00	$11.66	$0.00	$48.83
5	80	$29.90	$11.00	$14.20	$0.00	$55.10

Notes:

Steps 2000hrs. Prior 9/1/05; 40/40/45/50/55/60/65/75/80/85

Apprentice to Journeyworker Ratio:1:3

PNEUMATIC CONTROLS (TEMP.) *PLUMBERS & PIPEFITTERS LOCAL 51*	03/01/2016	$37.38	$11.00	$16.10	$0.00	$64.48
For apprentice rates see "Apprentice- PIPEFITTER" or "PLUMBER/PIPEFITTER"						
PNEUMATIC DRILL/TOOL OPERATOR *LABORERS - ZONE 2*	06/01/2016	$31.90	$7.45	$12.65	$0.00	$52.00
	12/01/2016	$32.65	$7.45	$12.65	$0.00	$52.75
For apprentice rates see "Apprentice- LABORER"						
POWDERMAN & BLASTER *LABORERS - ZONE 2*	06/01/2016	$32.65	$7.45	$12.65	$0.00	$52.75
	12/01/2016	$33.40	$7.45	$12.65	$0.00	$53.50
For apprentice rates see "Apprentice- LABORER"						

Classification	Effective Date	Base Wage	Health	Pension	Supplemental Unemployment	Total Rate
POWER SHOVEL/DERRICK/TRENCHING MACHINE *OPERATING ENGINEERS LOCAL 4*	06/01/2016	$44.23	$10.00	$15.15	$0.00	$69.38
	12/01/2016	$45.48	$10.00	$15.15	$0.00	$70.63
	06/01/2017	$46.48	$10.00	$15.15	$0.00	$71.63
	12/01/2017	$47.48	$10.00	$15.15	$0.00	$72.63
For apprentice rates see "Apprentice- OPERATING ENGINEERS"						
PUMP OPERATOR (CONCRETE) *OPERATING ENGINEERS LOCAL 4*	06/01/2016	$44.23	$10.00	$15.15	$0.00	$69.38
	12/01/2016	$45.48	$10.00	$15.15	$0.00	$70.63
	06/01/2017	$46.48	$10.00	$15.15	$0.00	$71.63
	12/01/2017	$47.48	$10.00	$15.15	$0.00	$72.63
For apprentice rates see "Apprentice- OPERATING ENGINEERS"						
PUMP OPERATOR (DEWATERING, OTHER) *OPERATING ENGINEERS LOCAL 4*	06/01/2016	$30.40	$10.00	$15.15	$0.00	$55.55
	12/01/2016	$31.27	$10.00	$15.15	$0.00	$56.42
	06/01/2017	$31 96	$10 00	$15.15	$0.00	$57 11
	12/01/2017	$32.65	$10.00	$15.15	$0.00	$57.80
For apprentice rates see "Apprentice- OPERATING ENGINEERS"						
READY-MIX CONCRETE DRIVER *TEAMSTERS LOCAL 59*	06/01/2008	$19.00	$5.10	$4.21	$0.00	$28.31
RECLAIMERS *OPERATING ENGINEERS LOCAL 4*	06/01/2016	$43.81	$10.00	$15.15	$0.00	$68.96
	12/01/2016	$45.04	$10.00	$15.15	$0 00	$70.19
	06/01/2017	$46.03	$10.00	$15.15	$0.00	$71.18
	12/01/2017	$47.02	$10.00	$15.15	$0.00	$72.17
For apprentice rates see "Apprentice- OPERATING ENGINEERS"						
RESIDENTIAL WOOD FRAME (All Other Work) *CARPENTERS -ZONE 1 (Residential Wood)*	04/01/2015	$41.52	$9.80	$15.61	$0.00	$66.93
RESIDENTIAL WOOD FRAME CARPENTER ** ** The Residential Wood Frame Carpenter classification applies only to the construction of new, wood frame residences that do not exceed four stories including the basement *CARPENTERS ZONE 1 (Residential Wood)*	04/01/2015	$29.80	$7.00	$6.31	$0.00	$43.11

As of 9/1/09 Carpentry work on wood-frame residential WEATHERIZATION projects shall be paid the RESIDENTIAL WOOD FRAME CARPENTER rate

Apprentice *CARPENTER (Residential Wood Frame) - Zone 1*

Effective Date - 04/01/2015

Step	percent	Apprentice Base Wage	Health	Pension	Supplemental Unemployment	Total Rate
1	60	$17.88	$7.00	$0.00	$0.00	$24.88
2	60	$17.88	$7.00	$0.00	$0.00	$24.88
3	65	$19.37	$7.00	$6.31	$0.00	$32.68
4	70	$20 86	$7 00	$6 31	$0 00	$34 17
5	75	$22.35	$7.00	$6.31	$0.00	$35.66
6	80	$23.84	$7.00	$6.31	$0.00	$37.15
7	85	$25.33	$7.00	$6.31	$0.00	$38.64
8	90	$26.82	$7.00	$6.31	$0.00	$40.13

Notes:

Apprentice to Journeyworker Ratio:1:5

Classification	Effective Date	Base Wage	Health	Pension	Supplemental Unemployment	Total Rate
RIDE-ON MOTORIZED BUGGY OPERATOR *LABORERS - ZONE 2*	06/01/2016	$31.90	$7.45	$12.65	$0.00	$52.00
	12/01/2016	$32 65	$7 45	$12.65	$0.00	$52 75
For apprentice rates see "Apprentice- LABORER"						
ROLLER/SPREADER/MULCHING MACHINE *OPERATING ENGINEERS LOCAL 4*	06/01/2016	$43.81	$10.00	$15.15	$0.00	$68.96
	12/01/2016	$45.04	$10.00	$15.15	$0.00	$70.19
	06/01/2017	$46.03	$10.00	$15.15	$0.00	$71.18
	12/01/2017	$47.02	$10.00	$15.15	$0 00	$72.17
For apprentice rates see "Apprentice- OPERATING ENGINEERS"						
ROOFER (Inc.Roofer Waterproofng &Roofer Damproofg) *ROOFERS LOCAL 33*	08/01/2016	$41.11	$11.00	$13.00	$0.00	$65.11
	02/01/2017	$42.26	$11.00	$13.00	$0.00	$66.26
	08/01/2017	$43.36	$11.00	$13.00	$0.00	$67.36
	02/01/2018	$44.51	$11.00	$13.00	$0.00	$68.51
	08/01/2018	$45.61	$11.00	$13.00	$0.00	$69.61
	02/01/2019	$46.76	$11.00	$13.00	$0.00	$70.76

Apprentice - *ROOFER - Local 33*

Effective Date - 08/01/2016

Step	percent	Apprentice Base Wage	Health	Pension	Supplemental Unemployment	Total Rate
1	50	$20.56	$11.00	$3.44	$0.00	$35.00
2	60	$24.67	$11.00	$13.00	$0.00	$48.67
3	65	$26.72	$11.00	$13.00	$0.00	$50.72
4	75	$30.83	$11.00	$13.00	$0.00	$54.83
5	85	$34.94	$11.00	$13.00	$0.00	$58.94

Effective Date - 02/01/2017

Step	percent	Apprentice Base Wage	Health	Pension	Supplemental Unemployment	Total Rate
1	50	$21.13	$11.00	$3.44	$0.00	$35.57
2	60	$25.36	$11.00	$13.00	$0.00	$49.36
3	65	$27.47	$11.00	$13.00	$0.00	$51.47
4	75	$31.70	$11.00	$13.00	$0.00	$55.70
5	85	$35.92	$11.00	$13.00	$0.00	$59.92

Notes: ** 1:5, 2:6-10, the 1:10; Reroofing: 1:4, then 1:1
Step 1 is 2000 hrs.; Steps 2-5 are 1000 hrs.

Apprentice to Journeyworker Ratio:**

ROOFER SLATE / TILE / PRECAST CONCRETE *ROOFERS LOCAL 33*	08/01/2016	$41.36	$11.00	$13 00	$0.00	$65.36
	02/01/2017	$42.51	$11.00	$13.00	$0.00	$66.51
	08/01/2017	$43.61	$11.00	$13.00	$0.00	$67.61
	02/01/2018	$44.76	$11.00	$13.00	$0.00	$68.76
	08/01/2018	$45.86	$11.00	$13.00	$0.00	$69.86
	02/01/2019	$47.01	$11.00	$13.00	$0.00	$71.01
For apprentice rates see "Apprentice- ROOFER"						
SHEETMETAL WORKER *SHEETMETAL WORKERS LOCAL 17 - B*	04/01/2016	$35.60	$10.70	$14.79	$1.83	$62.92

Classification	Effective Date	Base Wage	Health	Pension	Supplemental Unemployment	Total Rate

Apprentice - *SHEET METAL WORKER - Local 17-B*

Effective Date - 04/01/2016

Step	percent	Apprentice Base Wage	Health	Pension	Supplemental Unemployment	Total Rate
1	40	$14.24	$10.70	$3.51	$0.87	$29.32
2	45	$16.02	$10.70	$3.95	$0.94	$31.61
3	50	$17.80	$10.70	$9.33	$1.15	$38.98
4	55	$19.58	$10.70	$9.33	$1.21	$40.82
5	60	$21.36	$10.70	$12.08	$1.32	$45.46
6	65	$23.14	$10.70	$12.31	$1.38	$47.53
7	70	$24.92	$10.70	$12.54	$1.44	$49.60
8	75	$26.70	$10.70	$12.77	$1.51	$51.68
9	80	$28.48	$10.70	$12.99	$1.57	$53.74
10	85	$30.26	$10.70	$13.22	$1.63	$55.81

Notes:

Apprentice to Journeyworker Ratio:1:3

SIGN ERECTOR *PAINTERS LOCAL 35 - ZONE 2*	06/01/2013	$25.81	$7.07	$7.05	$0.00	$39.93

Apprentice - *SIGN ERECTOR - Local 35 Zone 2*

Effective Date - 06/01/2013

Step	percent	Apprentice Base Wage	Health	Pension	Supplemental Unemployment	Total Rate
1	50	$12.91	$7.07	$0.00	$0.00	$19.98
2	55	$14.20	$7.07	$2.45	$0.00	$23.72
3	60	$15.49	$7.07	$2.45	$0.00	$25.01
4	65	$16.78	$7.07	$2.45	$0.00	$26.30
5	70	$18.07	$7.07	$7.05	$0.00	$32.19
6	75	$19.36	$7.07	$7.05	$0.00	$33.48
7	80	$20.65	$7.07	$7.05	$0.00	$34.77
8	85	$21.94	$7.07	$7.05	$0.00	$36.06
9	90	$23.23	$7.07	$7.05	$0.00	$37.35

Notes:

Steps are 4 mos.

Apprentice to Journeyworker Ratio:1:1

SPECIALIZED EARTH MOVING EQUIP < 35 TONS *TEAMSTERS JOINT COUNCIL NO. 10 ZONE B*	08/01/2016	$32.44	$10 91	$10.08	$0.00	$53 43
	12/01/2016	$32.44	$10.91	$10.89	$0.00	$54.24
SPECIALIZED EARTH MOVING EQUIP > 35 TONS *TEAMSTERS JOINT COUNCIL NO. 10 ZONE B*	08/01/2016	$32.73	$10.91	$10.08	$0.00	$53.72
	12/01/2016	$32.73	$10.91	$10.89	$0.00	$54.53
SPRINKLER FITTER *SPRINKLER FITTERS LOCAL 550 - (Section B) Zone 2*	10/01/2016	$49.93	$8.52	$17.05	$0.00	$75.50
	03/01/2017	$50.83	$8.52	$17.05	$0.00	$76.40

Classification	Effective Date	Base Wage	Health	Pension	Supplemental Unemployment	Total Rate

Apprentice - *SPRINKLER FITTER - Local 550 (Section B) Zone 2*

Effective Date - 10/01/2016

Step	percent	Apprentice Base Wage	Health	Pension	Supplemental Unemployment	Total Rate
1	35	$17.48	$8.52	$8.55	$0.00	$34.55
2	40	$19.97	$8.52	$8.55	$0.00	$37.04
3	45	$22.47	$8.52	$8.55	$0.00	$39.54
4	50	$24.97	$8.52	$8.55	$0.00	$42.04
5	55	$27.46	$8.52	$8.55	$0.00	$44.53
6	60	$29.96	$8.52	$10.05	$0.00	$48.53
7	65	$32.45	$8.52	$10.05	$0.00	$51.02
8	70	$34.95	$8.52	$10.05	$0.00	$53.52
9	75	$37.45	$8.52	$10.05	$0.00	$56.02
10	80	$39.94	$8.52	$10.05	$0.00	$58.51

Effective Date - 03/01/2017

Step	percent	Apprentice Base Wage	Health	Pension	Supplemental Unemployment	Total Rate
1	35	$17.79	$8.52	$8.55	$0.00	$34.86
2	40	$20.33	$8.52	$8.55	$0.00	$37.40
3	45	$22.87	$8.52	$8.55	$0.00	$39.94
4	50	$25.42	$8.52	$8.55	$0.00	$42.49
5	55	$27.96	$8.52	$8.55	$0.00	$45.03
6	60	$30.50	$8.52	$10.05	$0.00	$49.07
7	65	$33.04	$8.52	$10.05	$0.00	$51.61
8	70	$35.58	$8.52	$10.05	$0.00	$54.15
9	75	$38.12	$8.52	$10.05	$0.00	$56.69
10	80	$40.66	$8.52	$10.05	$0.00	$59.23

Notes: Apprentice entered prior 9/30/10:
40/45/50/55/60/65/70/75/80/85
Steps are 850 hours

Apprentice to Journeyworker Ratio:1:3

STEAM BOILER OPERATOR *OPERATING ENGINEERS LOCAL 4*	06/01/2016	$43.81	$10.00	$15.15	$0 00	$68.96
	12/01/2016	$45.04	$10.00	$15.15	$0.00	$70.19
	06/01/2017	$46.03	$10.00	$15.15	$0.00	$71.18
	12/01/2017	$47.02	$10.00	$15.15	$0.00	$72.17
For apprentice rates see "Apprentice- OPERATING ENGINEERS"						
TAMPERS, SELF-PROPELLED OR TRACTOR DRAWN *OPERATING ENGINEERS LOCAL 4*	06/01/2016	$43.81	$10.00	$15.15	$0.00	$68.96
	12/01/2016	$45.04	$10.00	$15 15	$0.00	$70.19
	06/01/2017	$46.03	$10.00	$15.15	$0.00	$71.18
	12/01/2017	$47.02	$10.00	$15.15	$0.00	$72.17
For apprentice rates see "Apprentice- OPERATING ENGINEERS"						
TELECOMMUNICATION TECHNICIAN *ELECTRICIANS LOCAL 223*	09/01/2016	$33.33	$8.90	$9.78	$0.00	$52.01

Classification	Effective Date	Base Wage	Health	Pension	Supplemental Unemployment	Total Rate

Apprentice - *TELECOMMUNICATION TECHNICIAN - Local 223*

Effective Date - 09/01/2016

Step	percent	Apprentice Base Wage	Health	Pension	Supplemental Unemployment	Total Rate
1	0	$0.00	$0.00	$0.00	$0.00	$0.00

Notes: See Electrician Apprentice Wages
Steps are 750hrs
Telecom Apprentice Wages shall be the same as the Electrician Apprentice Wages

Apprentice to Journeyworker Ratio:2:3

TERRAZZO FINISHERS *BRICKLAYERS LOCAL 3 - MARBLE & TILE*	08/01/2016	$49.70	$10.18	$19.22	$0.00	$79.10
	02/01/2017	$50.27	$10.18	$19.22	$0.00	$79.67

Apprentice - *TERRAZZO FINISHER - Local 3 Marble & Tile*

Effective Date - 08/01/2016

Step	percent	Apprentice Base Wage	Health	Pension	Supplemental Unemployment	Total Rate
1	50	$24.85	$10.18	$19.22	$0.00	$54.25
2	60	$29.82	$10.18	$19.22	$0.00	$59.22
3	70	$34.79	$10.18	$19.22	$0.00	$64.19
4	80	$39.76	$10.18	$19.22	$0.00	$69.16
5	90	$44.73	$10.18	$19.22	$0.00	$74.13

Effective Date - 02/01/2017

Step	percent	Apprentice Base Wage	Health	Pension	Supplemental Unemployment	Total Rate
1	50	$25.14	$10.18	$19.22	$0.00	$54.54
2	60	$30.16	$10.18	$19.22	$0.00	$59.56
3	70	$35.19	$10.18	$19.22	$0.00	$64.59
4	80	$40.22	$10.18	$19.22	$0.00	$69.62
5	90	$45.24	$10.18	$19.22	$0.00	$74.64

Notes:

Apprentice to Journeyworker Ratio:1:3

TEST BORING DRILLER *LABORERS - FOUNDATION AND MARINE*	06/01/2016	$37.20	$7.45	$14.00	$0.00	$58.65
	12/01/2016	$38.20	$7.45	$14.00	$0.00	$59.65
For apprentice rates see "Apprentice- LABORER"						
TEST BORING DRILLER HELPER *LABORERS - FOUNDATION AND MARINE*	06/01/2016	$35.92	$7.45	$14.00	$0.00	$57.37
	12/01/2016	$36.92	$7.45	$14.00	$0.00	$58.37
For apprentice rates see "Apprentice- LABORER"						
TEST BORING LABORER *LABORERS - FOUNDATION AND MARINE*	06/01/2016	$35.80	$7.45	$14.00	$0.00	$57.25
	12/01/2016	$36.80	$7.45	$14.00	$0.00	$58.25
For apprentice rates see "Apprentice- LABORER"						

Classification	Effective Date	Base Wage	Health	Pension	Supplemental Unemployment	Total Rate
TRACTORS/PORTABLE STEAM GENERATORS *OPERATING ENGINEERS LOCAL 4*	06/01/2016	$43.81	$10.00	$15.15	$0.00	$68.96
	12/01/2016	$45.04	$10.00	$15.15	$0.00	$70.19
	06/01/2017	$46.03	$10.00	$15.15	$0.00	$71.18
	12/01/2017	$47.02	$10.00	$15.15	$0.00	$72.17
For apprentice rates see "Apprentice- OPERATING ENGINEERS"						
TRAILERS FOR EARTH MOVING EQUIPMENT *TEAMSTERS JOINT COUNCIL NO. 10 ZONE B*	08/01/2016	$33.02	$10.91	$10.08	$0.00	$54.01
	12/01/2016	$33.02	$10.91	$10.89	$0.00	$54.82
TUNNEL WORK - COMPRESSED AIR *LABORERS (COMPRESSED AIR)*	06/01/2016	$48.08	$7.45	$14.40	$0.00	$69.93
	12/01/2016	$49.08	$7.45	$14.40	$0.00	$70.93
For apprentice rates see "Apprentice- LABORER"						
TUNNEL WORK - COMPRESSED AIR (HAZ. WASTE) *LABORERS (COMPRESSED AIR)*	06/01/2016	$50.08	$7.45	$14.40	$0.00	$71.93
	12/01/2016	$51.08	$7.45	$14.40	$0.00	$72.93
For apprentice rates see "Apprentice- LABORER"						
TUNNEL WORK - FREE AIR *LABORERS (FREE AIR TUNNEL)*	06/01/2016	$40.15	$7.45	$14.40	$0.00	$62.00
	12/01/2016	$41.15	$7.45	$14.40	$0.00	$63.00
For apprentice rates see "Apprentice- LABORER"						
TUNNEL WORK - FREE AIR (HAZ. WASTE) *LABORERS (FREE AIR TUNNEL)*	06/01/2016	$42.15	$7.45	$14.40	$0.00	$64.00
	12/01/2016	$43.15	$7.45	$14.40	$0.00	$65.00
For apprentice rates see "Apprentice- LABORER"						
VAC-HAUL *TEAMSTERS JOINT COUNCIL NO. 10 ZONE B*	08/01/2016	$32.44	$10.91	$10.08	$0.00	$53.43
	12/01/2016	$32.44	$10.91	$10.89	$0.00	$54.24
WAGON DRILL OPERATOR *LABORERS - ZONE 2*	06/01/2016	$31 90	$7 45	$12.65	$0.00	$52 00
	12/01/2016	$32.65	$7.45	$12.65	$0.00	$52.75
For apprentice rates see "Apprentice- LABORER"						
WASTE WATER PUMP OPERATOR *OPERATING ENGINEERS LOCAL 4*	06/01/2016	$44.23	$10.00	$15.15	$0.00	$69.38
	12/01/2016	$45.48	$10.00	$15.15	$0.00	$70.63
	06/01/2017	$46.48	$10.00	$15.15	$0.00	$71.63
	12/01/2017	$47.48	$10.00	$15.15	$0.00	$72.63
For apprentice rates see "Apprentice- OPERATING ENGINEERS"						
WATER METER INSTALLER *PLUMBERS & PIPEFITTERS LOCAL 51*	03/01/2016	$37.38	$11.00	$16.10	$0.00	$64.48
For apprentice rates see "Apprentice- PLUMBER/PIPEFITTER" or "PLUMBER/GASFITTER"						
Marine Drilling						
BLASTER *MARINE DRILLING*	10/01/2005	$27.83	$3.40	$4.50	$0.00	$35.73
BOAT CAPTAIN *MARINE DRILLING*	10/01/2005	$22.97	$3.40	$3.90	$0.00	$30.27
BOAT MASTER *MARINE DRILLING*	10/01/2005	$23.99	$3.40	$4.50	$0.00	$31.89
CORE DRILLER *MARINE DRILLING*	10/01/2005	$21.93	$3.40	$3.30	$0.00	$28.63
CORE DRILLER HELPER *MARINE DRILLING*	10/01/2005	$19.78	$3.40	$3.30	$0.00	$26.48
DRILLER *MARINE DRILLING*	10/01/2005	$27.30	$3.40	$4.50	$0.00	$35.20
ENGINEER *MARINE DRILLING*	10/01/2005	$27.29	$3.40	$4.50	$0 00	$35.19
HELPER *MARINE DRILLING*	10/01/2005	$23.97	$3.40	$3.30	$0.00	$30.67

Classification	Effective Date	Base Wage	Health	Pension	Supplemental Unemployment	Total Rate
MACHINIST *MARINE DRILLING*	10/01/2005	$27.03	$3.40	$3.90	$0.00	$34.33
OILER - MARINE DRILLING *MARINE DRILLING*	10/01/2005	$23 97	$3 40	$3.30	$0.00	$30 67
TUG DECKHAND *MARINE DRILLING*	10/01/2005	$19.14	$3.40	$3.30	$0.00	$25.84
WELDER *MARINE DRILLING*	10/01/2005	$27.03	$3.40	$3.90	$0.00	$34.33
Op Eng Marine (Dredging Work)						
BOAT OPERATOR *OPERATING ENGINEERS - MARINE DIVISION*	10/01/2011	$25.29	$5.20	$2.95	$0.00	$33.44
CERTIFIED WELDER *OPERATING ENGINEERS - MARINE DIVISION*	10/01/2011	$26.84	$5.20	$3.25	$0.00	$35.29
CHIEF WELDER/ CHIEF MATE *OPERATING ENGINEERS - MARINE DIVISION*	10/01/2011	$28.49	$5.20	$3 25	$0.00	$36.94
DERRICK / SPIDER / SPILLBARGE OPERATOR *OPERATING ENGINEERS - MARINE DIVISION*	10/01/2011	$28.49	$5.20	$3.25	$0.00	$36.94
DRAG BARGE OPERATOR / WELDER / MATE *OPERATING ENGINEERS - MARINE DIVISION*	10/01/2011	$26.14	$5.20	$2.95	$0.00	$34.29
ENGINEER / ELECTRICIAN *OPERATING ENGINEERS - MARINE DIVISION*	10/01/2011	$28.49	$5.20	$3.25	$0.00	$36.94
LICENSED BOAT OPERATOR *OPERATING ENGINEERS - MARINE DIVISION*	10/01/2011	$28.49	$5.20	$3.25	$0.00	$36.94
LICENSED TUG OPERATOR OVER 1000HP *OPERATING ENGINEERS MARINE DIVISION*	10/01/2011	$32.89	$5.20	$3.25	$0.00	$41.34
MAINTENANCE ENGINEER *OPERATING ENGINEERS - MARINE DIVISION*	10/01/2011	$28.49	$5.20	$3.25	$0.00	$36.94
OILER MARINE DIVISION *OPERATING ENGINEERS - MARINE DIVISION*	10/01/2011	$21.09	$5.20	$2.65	$0 00	$28.94
OPERATOR / LEVERMAN *OPERATING ENGINEERS - MARINE DIVISION*	10/01/2011	$32.89	$5.20	$3.25	$0.00	$41.34
RODMAN / SCOWMAN *OPERATING ENGINEERS - MARINE DIVISION*	10/01/2011	$21.09	$5.20	$2.65	$0.00	$28.94
SHOREMAN / DECKHAND *OPERATING ENGINEERS - MARINE DIVISION*	10/01/2011	$21.09	$5.20	$2.65	$0.00	$28.94
Outside Electrical - East						
CABLE TECHNICIAN (Power Zone) *OUTSIDE ELECTRICAL WORKERS - EAST LOCAL 104*	08/28/2016	$26.61	$7.50	$1.80	$0.00	$35.91
	09/03/2017	$27.14	$7.75	$1.81	$0.00	$36.70
For apprentice rates see "Apprentice- LINEMAN"						
CABLEMAN (Underground Ducts & Cables) *OUTSIDE ELECTRICAL WORKERS - EAST LOCAL 104*	08/28/2016	$37.70	$7.50	$8.87	$0.00	$54.07
	09/03/2017	$38.45	$7.75	$9.53	$0.00	$55.73
For apprentice rates see "Apprentice- LINEMAN"						
DRIVER / GROUNDMAN CDL *OUTSIDE ELECTRICAL WORKERS - EAST LOCAL 104*	08/28/2016	$31.05	$7.50	$8.89	$0.00	$47.44
	09/03/2017	$31.66	$7.75	$9.44	$0.00	$48.85
For apprentice rates see "Apprentice- LINEMAN"						
DRIVER / GROUNDMAN -Inexperienced (<2000 Hrs) *OUTSIDE ELECTRICAL WORKERS - EAST LOCAL 104*	08/28/2016	$24.39	$7.50	$1.73	$0.00	$33.62
	09/03/2017	$24.88	$7.75	$1.75	$0.00	$34.38
For apprentice rates see "Apprentice- LINEMAN"						

Classification	Effective Date	Base Wage	Health	Pension	Supplemental Unemployment	Total Rate
EQUIPMENT OPERATOR (Class A CDL) *OUTSIDE ELECTRICAL WORKERS - EAST LOCAL 104*	08/28/2016	$37.70	$7.50	$12.95	$0.00	$58.15
	09/03/2017	$38.45	$7.75	$13.61	$0.00	$59.81
For apprentice rates see "Apprentice- LINEMAN"						
EQUIPMENT OPERATOR (Class B CDL) *OUTSIDE ELECTRICAL WORKERS - EAST LOCAL 104*	08/28/2016	$33.26	$7.50	$9.63	$0.00	$50.39
	09/03/2017	$33.92	$7.75	$10 21	$0.00	$51.88
For apprentice rates see "Apprentice- LINEMAN"						
GROUNDMAN *OUTSIDE ELECTRICAL WORKERS - EAST LOCAL 104*	08/28/2016	$24.39	$7.50	$1.73	$0.00	$33.62
	09/03/2017	$24.88	$7.75	$1.75	$0.00	$34.38
For apprentice rates see "Apprentice- LINEMAN"						
GROUNDMAN -Inexperienced (<2000 Hrs.) *OUTSIDE ELECTRICAL WORKERS - EAST LOCAL 104*	08/28/2016	$19.96	$7.50	$1.60	$0.00	$29.06
	09/03/2017	$20.35	$7.75	$1 61	$0.00	$29.71
For apprentice rates see "Apprentice- LINEMAN"						
JOURNEYMAN LINEMAN *OUTSIDE ELECTRICAL WORKERS - EAST LOCAL 104*	08/28/2016	$44.35	$7.50	$15.83	$0.00	$67.68
	09/03/2017	$45.23	$7.75	$16.61	$0.00	$69.59

Apprentice - *LINEMAN (Outside Electrical) East Local 104*

Effective Date - 08/28/2016

Step	percent	Apprentice Base Wage	Health	Pension	Supplemental Unemployment	Total Rate
1	60	$26.61	$7.50	$3.30	$0.00	$37.41
2	65	$28.83	$7.50	$3.36	$0.00	$39.69
3	70	$31.05	$7.50	$3.43	$0.00	$41.98
4	75	$33.26	$7.50	$5.00	$0.00	$45.76
5	80	$35.48	$7.50	$5.06	$0.00	$48.04
6	85	$37.70	$7.50	$5.13	$0.00	$50.33
7	90	$39.92	$7.50	$7.20	$0.00	$54.62

Effective Date - 09/03/2017

Step	percent	Apprentice Base Wage	Health	Pension	Supplemental Unemployment	Total Rate
1	60	$27.14	$7.75	$3.31	$0.00	$38.20
2	65	$29.40	$7.75	$3.38	$0.00	$40.53
3	70	$31.66	$7.75	$3.45	$0.00	$42.86
4	75	$33.92	$7.75	$5.02	$0.00	$46.69
5	80	$36.18	$7.75	$5.09	$0.00	$49.02
6	85	$38.45	$7.75	$5.15	$0.00	$51.35
7	90	$40.71	$7.75	$7.22	$0.00	$55.68

Notes:

Apprentice to Journeyworker Ratio:1:2

TELEDATA CABLE SPLICER *OUTSIDE ELECTRICAL WORKERS - EAST LOCAL 104*	01/01/2016	$28.98	$4.25	$3.12	$0.00	$36.35
TELEDATA LINEMAN/EQUIPMENT OPERATOR *OUTSIDE ELECTRICAL WORKERS - EAST LOCAL 104*	01/01/2016	$27.31	$4.25	$3.07	$0.00	$34.63
TELEDATA WIREMAN/INSTALLER/TECHNICIAN *OUTSIDE ELECTRICAL WORKERS - EAST LOCAL 104*	01/01/2016	$27.31	$4.25	$3.07	$0.00	$34.63

Classification	Effective Date	Base Wage	Health	Pension	Supplemental Unemployment	Total Rate
TREE TRIMMER *OUTSIDE ELECTRICAL WORKERS - EAST LOCAL 104*	01/31/2016	$18.51	$3.55	$0.00	$0.00	$22.06
This classification applies only to tree work done: (a) for a utility company, R E A cooperative, or railroad or coal mining company, and (b) for the purpose of operating, maintaining, or repairing the utility company's equipment, and (c) by a person who is using hand or mechanical cutting methods and is not on the ground This classification does not apply to wholesale tree removal						
TREE TRIMMER GROUNDMAN *OUTSIDE ELECTRICAL WORKERS - EAST LOCAL 104*	01/31/2016	$16.32	$3.55	$0.00	$0.00	$19.87
This classification applies only to tree work done: (a) for a utility company, R E A cooperative, or railroad or coal mining company, and (b) for the purpose of operating, maintaining, or repairing the utility company's equipment, and (c) by a person who is using hand or mechanical cutting methods and is on the ground This classification does not apply to wholesale tree removal						

Additional Apprentice Information:

Minimum wage rates for apprentices employed on public works projects are listed above as a percentage of the pre-determined hourly wage rate established by the Commissioner under the provisions of the M G L c 149, ss 26-27D Apprentice ratios are established by the Division of Apprenticeship Training pursuant to M G L c 23, ss 11E-11L

All apprentices must be registered with the Division of Apprenticeship Training in accordance with M G L c 23, ss 11E-11L

All steps are six months (1000 hours)
Ratios are expressed in allowable number of apprentices to journeymen or fraction thereof, unless otherwise specified

** Multiple ratios are listed in the comment field
*** APP to JM; 1:1, 2:2, 2:3, 3:4, 4:4, 4:5, 4:6, 5:7, 6:7, 6:8, 6:9, 7:10, 8:10, 8:11, 8:12, 9:13, 10:13, 10:14, etc
**** APP to JM; 1:1, 1:2, 2:3, 2:4, 3:5, 4:6, 4:7, 5:8, 6:9, 6:10, 7:11, 8:12, 8:13, 9:14, 10:15, 10:16, etc

"ATTACHMENT B"

[Regulatory Permits Documents]

Massachusetts Department of Environmental Protection
Bureau of Resource Protection - Wetlands

WPA Form 5 – Order of Conditions

Massachusetts Wetlands Protection Act M.G.L. c. 131, §40
And the Town of Nantucket Wetlands Bylaw Chapter 136

Provided by MassDEP:
SE48- 2766
MassDEP File #

eDEP Transaction #

Nantucket
City/Town

A. General Information

1. From: Nantucket
Conservation Commission

2. This issuance is for (check one): a. ☒ Order of Conditions b. ☐ Amended Order of Conditions

3. To: Applicant:

Charles
a. First Name

Gibson
b. Last Name

Town of Nantucket
c. Organization

4 Fairgrounds Rd
d. Mailing Address

Nantucket
e. City/Town

MA
f. State

02554
g. Zip Code

4. Property Owner (if different from applicant):

Same
a. First Name

b. Last Name

c. Organization

d. Mailing Address

e. City/Town

f. State

g. Zip Code

5. Project Location:

15 Harbor View Way
a. Street Address

Nantucket
b. City/Town

342
c. Assessors Map/Plat Number

4.2.9
d. Parcel/Lot Number

Latitude and Longitude, if known: 41°17'16"
d. Latitude

70°5'49"
e. Longitude

A. General Information (cont.)

6. Property recorded at the Registry of Deeds for (attach additional information if more than one parcel):

Nantucket	
a. County	b. Certificate Number (if registered land)
63	329
c. Book	d. Page

7. Dates:

02/03/15	03/04/2015	03/04/2015
a. Date Notice of Intent Filed	b. Date Public Hearing Closed	c. Date of Issuance

8. Final Approved Plans and Other Documents (attach additional plan or document references as needed):

Proposed Site Plan	
a. Plan Title	
GZA Geo Environmental, Inc	RKT
b. Prepared By	c. Signed and Stamped by
02/13/2015	1"=20'
d. Final Revision Date	e. Scale
f. Additional Plan or Document Title	g. Date

B. Findings

1. Findings pursuant to the Massachusetts Wetlands Protection Act:

Following the review of the above-referenced Notice of Intent and based on the information provided in this application and presented at the public hearing, this Commission finds that the areas in which work is proposed is significant to the following interests of the Wetlands Protection Act (the Act). Check all that apply:

a. ☐ Public Water Supply
b. ☒ Land Containing Shellfish
c. ☒ Prevention of Pollution
d. ☐ Private Water Supply
e. ☒ Fisheries
f. ☒ Protection of Wildlife Habitat
g. ☒ Groundwater Supply
h. ☒ Storm Damage Prevention
i. ☒ Flood Control
j. ☒ Wetland Scenic Views (bylaw)
k. ☒ Recreation (Bylaw)

2. This Commission hereby finds the project, as proposed, is: (check one of the following boxes)

Approved subject to:

a. ☒ the following conditions which are necessary in accordance with the performance standards set forth in the wetlands regulations. This Commission orders that all work shall be performed in accordance with the Notice of Intent referenced above, the following General Conditions, and any other special conditions attached to this Order. To the extent that the following conditions modify or differ from the plans, specifications, or other proposals submitted with the Notice of Intent, these conditions shall control.

B. Findings (cont.)

Denied because:

b. ☐ the proposed work cannot be conditioned to meet the performance standards set forth in the wetland regulations. Therefore, work on this project may not go forward unless and until a new Notice of Intent is submitted which provides measures which are adequate to protect the interests of the Act, and a final Order of Conditions is issued. **A description of the performance standards which the proposed work cannot meet is attached to this Order.**

c. ☐ the information submitted by the applicant is not sufficient to describe the site, the work, or the effect of the work on the interests identified in the Wetlands Protection Act. Therefore, work on this project may not go forward unless and until a revised Notice of Intent is submitted which provides sufficient information and includes measures which are adequate to protect the Act's interests, and a final Order of Conditions is issued. **A description of the specific information which is lacking and why it is necessary is attached to this Order as per 310 CMR 10.05(6)(c).**

3. ☐ Buffer Zone Impacts: Shortest distance between limit of project disturbance and the wetland resource area specified in 310 CMR 10.02(1)(a) _____ a. linear feet

Inland Resource Area Impacts: Check all that apply below. (For Approvals Only)

Resource Area	Proposed Alteration	Permitted Alteration	Proposed Replacement	Permitted Replacement
4. ☐ Bank	a. linear feet	b. linear feet	c. linear feet	d. linear feet
5. ☐ Bordering Vegetated Wetland	a. square feet	b. square feet	c. square feet	d. square feet
6. ☐ Land Under Waterbodies and Waterways	a. square feet	b. square feet	c. square feet	d. square feet
	e. c/y dredged	f. c/y dredged		
7. ☐ Bordering Land Subject to Flooding	a. square feet	b. square feet	c. square feet	d. square feet
Cubic Feet Flood Storage	e. cubic feet	f. cubic feet	g. cubic feet	h. cubic feet
8. ☐ Isolated Land Subject to Flooding	a. square feet	b. square feet		
Cubic Feet Flood Storage	c. cubic feet	d. cubic feet	e. cubic feet	f. cubic feet
9. ☐ Riverfront Area	a. total sq. feet	b. total sq. feet		
Sq ft within 100 ft	c. square feet	d. square feet	e. square feet	f. square feet
Sq ft between 100-200 ft	g. square feet	h. square feet	i. square feet	j. square feet

B. Findings (cont.)

Coastal Resource Area Impacts: Check all that apply below. (For Approvals Only)

	Proposed Alteration	Permitted Alteration	Proposed Replacement	Permitted Replacement
10. ☐ Designated Port Areas	Indicate size under Land Under the Ocean, below			
11. ☒ Land Under the Ocean	2,200 a. square feet	2,200 b. square feet		
	c. c/y dredged	d. c/y dredged		
12. ☐ Barrier Beaches	Indicate size under Coastal Beaches and/or Coastal Dunes below			
13. ☒ Coastal Beaches	2,820 a. square feet	2,820 b. square feet	c. nourishment	cu yd d. nourishment
14. ☐ Coastal Dunes	a. square feet	b. square feet	cu yd c. nourishment	cu yd d. nourishment
15. ☐ Coastal Banks	a. linear feet	b. linear feet		
16. ☐ Rocky Intertidal Shores	a. square feet	b. square feet		
17. ☐ Salt Marshes	a. square feet	b. square feet	c. square feet	d. square feet
18. ☐ Land Under Salt Ponds	a. square feet	b. square feet		
	c. c/y dredged	d. c/y dredged		
19. ☐ Land Containing Shellfish	a. square feet	b. square feet	c. square feet	d. square feet
20. ☐ Fish Runs	Indicate size under Coastal Banks, Inland Bank, Land Under the Ocean, and/or inland Land Under Waterbodies and Waterways, above			
	a. c/y dredged	b. c/y dredged		
21. ☒ Land Subject to Coastal Storm Flowage	540 a. square feet	540 b. square feet		

B. Findings (cont.)

22. ☐ Restoration/Enhancement *:

a. square feet of BVW | b. square feet of salt marsh

23. ☐ Stream Crossing(s):

a. number of new stream crossings | b. number of replacement stream crossings

C. General Conditions Under Massachusetts Wetlands Protection Act

The following conditions are only applicable to Approved projects.

1. Failure to comply with all conditions stated herein, and with all related statutes and other regulatory measures, shall be deemed cause to revoke or modify this Order.
2. The Order does not grant any property rights or any exclusive privileges; it does not authorize any injury to private property or invasion of private rights.
3. This Order does not relieve the permittee or any other person of the necessity of complying with all other applicable federal, state, or local statutes, ordinances, bylaws, or regulations.
4. The work authorized hereunder shall be completed within three years from the date of this Order unless either of the following apply:
   a. the work is a maintenance dredging project as provided for in the Act; or
   b. the time for completion has been extended to a specified date more than three years, but less than five years, from the date of issuance. If this Order is intended to be valid for more than three years, the extension date and the special circumstances warranting the extended time period are set forth as a special condition in this Order.
5. This Order may be extended by the issuing authority for one or more periods of up to three years each upon application to the issuing authority at least 30 days prior to the expiration date of the Order.
6. If this Order constitutes an Amended Order of Conditions, this Amended Order of Conditions does not extend the issuance date of the original Final Order of Conditions and the Order will expire on **03/04/18** unless extended in writing by the Department.
7. Any fill used in connection with this project shall be clean fill. Any fill shall contain no trash, refuse, rubbish, or debris, including but not limited to lumber, bricks, plaster, wire, lath, paper, cardboard, pipe, tires, ashes, refrigerators, motor vehicles, or parts of any of the foregoing.
8. This Order is not final until all administrative appeal periods from this Order have elapsed, or if such an appeal has been taken, until all proceedings before the Department have been completed.

C. General Conditions Under Massachusetts Wetlands Protection Act (cont.)

9. No work shall be undertaken until the Order has become final and then has been recorded in the Registry of Deeds or the Land Court for the district in which the land is located, within the chain of title of the affected property. In the case of recorded land, the Final Order shall also be noted in the Registry's Grantor Index under the name of the owner of the land upon which the proposed work is to be done. In the case of the registered land, the Final Order shall also be noted on the Land Court Certificate of Title of the owner of the land upon which the proposed work is done. The recording information shall be submitted to the Conservation Commission on the form at the end of this Order, which form must be stamped by the Registry of Deeds, prior to the commencement of work.

10. A sign shall be displayed at the site not less then two square feet or more than three square feet in size bearing the words,

    "Massachusetts Department of Environmental Protection" [or, "MassDEP"]

    "File Number SE48- 2766 "

11. Where the Department of Environmental Protection is requested to issue a Superseding Order, the Conservation Commission shall be a party to all agency proceedings and hearings before MassDEP.

12. Upon completion of the work described herein, the applicant shall submit a Request for Certificate of Compliance (WPA Form 8A) to the Conservation Commission.

13. The work shall conform to the plans and special conditions referenced in this order.

14. Any change to the plans identified in Condition #13 above shall require the applicant to inquire of the Conservation Commission in writing whether the change is significant enough to require the filing of a new Notice of Intent.

15. The Agent or members of the Conservation Commission and the Department of Environmental Protection shall have the right to enter and inspect the area subject to this Order at reasonable hours to evaluate compliance with the conditions stated in this Order, and may require the submittal of any data deemed necessary by the Conservation Commission or Department for that evaluation.

16. This Order of Conditions shall apply to any successor in interest or successor in control of the property subject to this Order and to any contractor or other person performing work conditioned by this Order.

17. Prior to the start of work, and if the project involves work adjacent to a Bordering Vegetated Wetland, the boundary of the wetland in the vicinity of the proposed work area shall be marked by wooden stakes or flagging. Once in place, the wetland boundary markers shall be maintained until a Certificate of Compliance has been issued by the Conservation Commission.

C. General Conditions Under Massachusetts Wetlands Protection Act (cont.)

18. All sedimentation barriers shall be maintained in good repair until all disturbed areas have been fully stabilized with vegetation or other means. At no time shall sediments be deposited in a wetland or water body. During construction, the applicant or his/her designee shall inspect the erosion controls on a daily basis and shall remove accumulated sediments as needed. The applicant shall immediately control any erosion problems that occur at the site and shall also immediately notify the Conservation Commission, which reserves the right to require additional erosion and/or damage prevention controls it may deem necessary. Sedimentation barriers shall serve as the limit of work unless another limit of work line has been approved by this Order.

NOTICE OF STORMWATER CONTROL AND MAINTENANCE REQUIREMENTS

19. **The work associated with this Order (the "Project") is** (1) ☐ **is not** (2) ☒ **subject to the Massachusetts Stormwater Standards. If the work is subject to the Stormwater Standards, then the project is subject to the following conditions:**

a) All work, including site preparation, land disturbance, construction and redevelopment, shall be implemented in accordance with the construction period pollution prevention and erosion and sedimentation control plan and, if applicable, the Stormwater Pollution Prevention Plan required by the National Pollution Discharge Elimination System Construction General Permit as required by Stormwater Condition 8. Construction period erosion, sedimentation and pollution control measures and best management practices (BMPs) shall remain in place until the site is fully stabilized.

b) No stormwater runoff may be discharged to the post-construction stormwater BMPs unless and until a Registered Professional Engineer provides a Certification that:
i. all construction period BMPs have been removed or will be removed by a date certain specified in the Certification. For any construction period BMPs intended to be converted to post construction operation for stormwater attenuation, recharge, and/or treatment, the conversion is allowed by the MassDEP Stormwater Handbook BMP specifications and that the BMP has been properly cleaned or prepared for post construction operation, including removal of all construction period sediment trapped in inlet and outlet control structures;
ii. as-built final construction BMP plans are included, signed and stamped by a Registered Professional Engineer, certifying the site is fully stabilized;
iii. any illicit discharges to the stormwater management system have been removed, as per the requirements of Stormwater Standard 10;
iv. all post-construction stormwater BMPs are installed in accordance with the plans (including all planting plans) approved by the issuing authority, and have been inspected to ensure that they are not damaged and that they are in proper working condition;
v. any vegetation associated with post-construction BMPs is suitably established to withstand erosion.

C. General Conditions Under Massachusetts Wetlands Protection Act (cont.)

c) The landowner is responsible for BMP maintenance until the issuing authority is notified that another party has legally assumed responsibility for BMP maintenance. Prior to requesting a Certificate of Compliance, or Partial Certificate of Compliance, the responsible party (defined in General Condition 18(e)) shall execute and submit to the issuing authority an Operation and Maintenance Compliance Statement ("O&M Statement) for the Stormwater BMPs identifying the party responsible for implementing the stormwater BMP Operation and Maintenance Plan ("O&M Plan") and certifying the following: *i.*) the O&M Plan is complete and will be implemented upon receipt of the Certificate of Compliance, and *ii.*) the future responsible parties shall be notified in writing of their ongoing legal responsibility to operate and maintain the stormwater management BMPs and implement the Stormwater Pollution Prevention Plan.

d) Post-construction pollution prevention and source control shall be implemented in accordance with the long-term pollution prevention plan section of the approved Stormwater Report and, if applicable, the Stormwater Pollution Prevention Plan required by the National Pollution Discharge Elimination System Multi-Sector General Permit.

e) Unless and until another party accepts responsibility, the landowner, or owner of any drainage easement, assumes responsibility for maintaining each BMP. To overcome this presumption, the landowner of the property must submit to the issuing authority a legally binding agreement of record, acceptable to the issuing authority, evidencing that another entity has accepted responsibility for maintaining the BMP, and that the proposed responsible party shall be treated as a permittee for purposes of implementing the requirements of Conditions 18(f) through 18(k) with respect to that BMP. Any failure of the proposed responsible party to implement the requirements of Conditions 18(f) through 18(k) with respect to that BMP shall be a violation of the Order of Conditions or Certificate of Compliance. In the case of stormwater BMPs that are serving more than one lot, the legally binding agreement shall also identify the lots that will be serviced by the stormwater BMPs. A plan and easement deed that grants the responsible party access to perform the required operation and maintenance must be submitted along with the legally binding agreement.

f) The responsible party shall operate and maintain all stormwater BMPs in accordance with the design plans, the O&M Plan, and the requirements of the Massachusetts Stormwater Handbook.

C. General Conditions Under Massachusetts Wetlands Protection Act (cont.)

g) The responsible party shall:
1. Maintain an operation and maintenance log for the last three (3) consecutive calendar years of inspections, repairs, maintenance and/or replacement of the stormwater management system or any part thereof, and disposal (for disposal the log shall indicate the type of material and the disposal location);
2. Make the maintenance log available to MassDEP and the Conservation Commission ("Commission") upon request; and
3. Allow members and agents of the MassDEP and the Commission to enter and inspect the site to evaluate and ensure that the responsible party is in compliance with the requirements for each BMP established in the O&M Plan approved by the issuing authority.

h) All sediment or other contaminants removed from stormwater BMPs shall be disposed of in accordance with all applicable federal, state, and local laws and regulations.

i) Illicit discharges to the stormwater management system as defined in 310 CMR 10.04 are prohibited.

j) The stormwater management system approved in the Order of Conditions shall not be changed without the prior written approval of the issuing authority.

k) Areas designated as qualifying pervious areas for the purpose of the Low Impact Site Design Credit (as defined in the MassDEP Stormwater Handbook, Volume 3, Chapter 1, Low Impact Development Site Design Credits) shall not be altered without the prior written approval of the issuing authority.

l) Access for maintenance, repair, and/or replacement of BMPs shall not be withheld. Any fencing constructed around stormwater BMPs shall include access gates and shall be at least six inches above grade to allow for wildlife passage.

Special Conditions (if you need more space for additional conditions, please attach a text document):

D. Findings Under Municipal Wetlands Bylaw or Ordinance

1. Is a municipal wetlands bylaw or ordinance applicable? ☒ Yes ☐ No

2. The Nantucket Conservation Commission hereby finds (check one that applies):

   a. ☐ that the proposed work cannot be conditioned to meet the standards set forth in a municipal ordinance or bylaw, specifically:

   1. Municipal Ordinance or Bylaw | 2. Citation

   Therefore, work on this project may not go forward unless and until a revised Notice of Intent is submitted which provides measures which are adequate to meet these standards, and a final Order of Conditions is issued.

   b. ☐ that the following additional conditions are necessary to comply with a municipal ordinance or bylaw:

   1. Municipal Ordinance or Bylaw | 2. Citation

3. The Commission orders that all work shall be performed in accordance with the following conditions and with the Notice of Intent referenced above. To the extent that the following conditions modify or differ from the plans, specifications, or other proposals submitted with the Notice of Intent, the conditions shall control.
   The special conditions relating to municipal ordinance or bylaw are as follows (if you need more space for additional conditions, attach a text document):
   Please view additional findings and conditions page(s)

B1. Additional Conditions

The Town of Nantucket Conservation Commission has found it necessary to include these additional conditions as a standard part of every Order. If the condition applies, then the corresponding box will be checked:

☒ 1. Pursuant to General Condition Number 8, this Order of Conditions must be registered with the Registry of Deeds for Nantucket, and proof of recording shall be submitted to the Commission prior to the commencement of any work approved in this Order.

☒ 2. No work approved under this Order shall take place until all administrative appeal periods from the Order have elapsed, or, if an appeal has been filed, until all proceedings have been completed.

☒ 3. The landowner, applicant, and/or the contractor will notify the Commission in writing five days prior to the start of work. The letter shall state the name, address, and telephone number of the project supervisor who will be responsible for insuring onsite compliance with this Order. (All erosion/sedimentation control devices shall be installed BEFORE the start of work.)

☒ 4. Prior to any activity at the site, a snow fence, siltation fence or a line of straw bales shall be staked as shown on the plan of record. After the fence or straw bales are installed, notice shall be given to the Nantucket Conservation Commission. **No work shall begin on the site for 72 hours after said notice is given; so as to allow Commission members time to inspect all siltation devices.** The snow fence, siltation fence, or straw bale line erected to prevent siltation, erosion, filling of the wetland, and trap windblown debris during construction, will also serve as a limit of the activity for work crews. It shall remain in good repair during all phases of construction, and it shall not be removed until all soils are stabilized and revegetated or until permission to remove it is given by the Commission.

☒ 5. An as-built plan, signed and stamped by a registered professional engineer or land surveyor in the Commonwealth of Massachusetts, and having the same scale as the final approved plans, shall be submitted to the Commission at the same time as a written request for a Certificate of Compliance, and shall specify how, if at all, the completed plan differs from the final approved plan. The as-built plan shall include, but not be limited to, the following: any/culvert inverts for inflow and outfalls; pipe slope, size, and composition; location of any other drainage structures and their composition; limits of fill or alteration; location of all structures and pavement within 100 feet of the wetland; the edge of the wetland; the grade contours within 100 feet of the wetland.

☒ 6. Members, employees, and agents of the Commission shall have the right to enter and inspect the premises to evaluate compliance with the conditions and performance standards stated in this Order, the Massachusetts Wetlands Protection Act, and pertinent Massachusetts regulations (310CMR10:00 through 10:99). The Commission may require the submittal of any data deemed necessary by the Commission for that evaluation.

☒ 7. The applicant, owners, successors, or assignees shall be responsible for maintaining any on-site drainage structures and outfalls, assuring the lasting integrity of vegetative cover on the site, and monitoring of site activities so as to prevent erosion, siltation, sedimentation, chemical contamination, or other detrimental impact to any on-site or off-site resource area. It shall be the responsibility of the property owner of record to ensure compliance with the maintenance conditions required by this Order.

B1. Additional Conditions (cont.)

☒ 8. This document shall be included in all construction contracts and subcontracts dealing with the work proposed and shall supersede other contract requirements.

☒ 9. A complete copy of this permit, including its drawings, Special Conditions, and any Amendments shall be available at the work site whenever work is being performed. The permittee shall provide a copy of this permit to all contractors, subcontractors, and other personnel performing work relating to this project in order to assure full knowledge and compliance with the permit's terms and conditions.

☒ 10. Natural vegetation between the wetland edge and upland edge of the Undisturbed Buffer shall be left intact. Within 48 hours of project completion, weather permitting, all disturbed areas shall be replanted as previously approved by the Commission. There shall be at least a 25-foot undisturbed buffer on the upland side of the wetland boundary, unless otherwise specified by this Order. This shall be an ongoing Condition that shall survive the expiration of this permit and shall be so noted on the Certificate of Compliance.

☒ 11. To minimize adverse effects on wildlife and water resources, the use of any pesticide or fertilizer requires explicit permission to be granted by the Commission. This shall be an ongoing Condition that shall survive the expiration of this permit, and shall be so noted on the Certificate of Compliance.

☒ 12. In all cases, no part of any structure, including decks, stairs, cantilevers, etc., may be closer than 50 feet from the approved wetland boundary unless otherwise specified in this Order. This shall be an ongoing Condition that shall survive the expiration of this permit and shall be so noted on the Certificate of Compliance.

☒ 13. Any refuse material found on the site shall be disposed of at an approved landfill and in no case may these materials be buried or disposed of in or near a wetland.

☒ 14. This Order of Conditions shall apply to any successor in interest or successor in control of the property.

☒ 15. No underground petroleum product storage tanks are allowed within 100 feet of any wetland or within any velocity (V) flood zone as indicated on the most recent FEMA floodplain maps.

☒ 16. No work under this Order of Conditions may proceed until the applicant has filed all necessary permits and applications with:
Board of Health, ZBA, HDC, Building Inspector, Army Corps of Engineers, DEP, Waterways, MNH, etc.

☒ 17. All construction and alterations must comply with the above referenced plans and the Conditions of this Order. Any changes intended to be made in the plans or in the work shall require the applicant to file a new Notice of Intent, or to inquire of the Commission in writing whether the change is substantial enough to require a new filing. No change in plan or work under this filing is permissible without a new Notice of Intent, or permission from the Commission.

FINDINGS and ADDITIONAL CONDITIONS
Massachusetts Wetlands Protection Act (MGL Chapter 131, Section 40)
Town of Nantucket Wetlands Bylaw (Chapter 136)

Address:	15 Harbor View Way
Assessor's Map and Parcel:	42.4.2-9
Property Owner:	Town of Nantucket
Applicant:	Town of Nantucket
DEP File Number:	SE48-2766
Filing Date:	February 13, 2015
Date Hearing Closed:	March 4, 2015
Date Orders Issued:	March 4, 2015
Plan of Record Information:	Children's Beach Boat Ramp (4 Sheets), dated February 2015, stamped by Anders B. Bjarngard, P.E.

Permit Overview:
This order permits the reconstruction of the Children's Beach Boat Ramp within Land Under the Ocean, Land Subject to Coastal Storm Flowage and the buffer zone to Coastal Beach. Waivers are required for this project.

Additional Findings:

1. The area falls outside mapped habitat areas and does not require NHESP review.

In addition to the General Conditions contained elsewhere in this document, the Commission includes the following Special Conditions pursuant to MGLCh131s40 and the Town of Nantucket Wetlands Protection Bylaw, Chapter 136:

18. All work shall be performed in accordance with the Site and Work Description contained within the Notice of Intent and plan notes set out on the plan of record, provided project narratives, and protocols.
19. All materials and machinery are to be stored outside of the resource areas.
20. All refueling of land based machinery must be done in excess of fifty feet from the water line.
21. The barge shall maintain the best possible separation from the bottom of the vessel and Land Under the Ocean at all times.
22. A siltation boom shall be attached to the barge and setup to confine the active work area.
23. Any work between the dates of January 15 and May 31 may not produce silt. Work behind a coffer dam can be performed during this time period provided that the cofferdam or dewatering associated with the coffer dam does not produce siltation into the waterway.

WAIVERS UNDER THE NANTUCKET WETLANDS BYLAW/REGULATIONS
Waivers are required to Section 2.02(B)(6) that all work which is not-water dependent shall maintain at least a 25-foot undisturbed area adjacent to a Coastal Beach. Given the current use of the land in this capacity and the work proposed the Commission finds that the work as proposed and conditioned will not have an adverse impact to the resource area. The Commission finds that there are no reasonable alternatives that allow the project to go forward. Therefore the Commission grants a waiver under Section 1.03(F)(3)(a) of the Town of Nantucket Wetland protection Regulations.

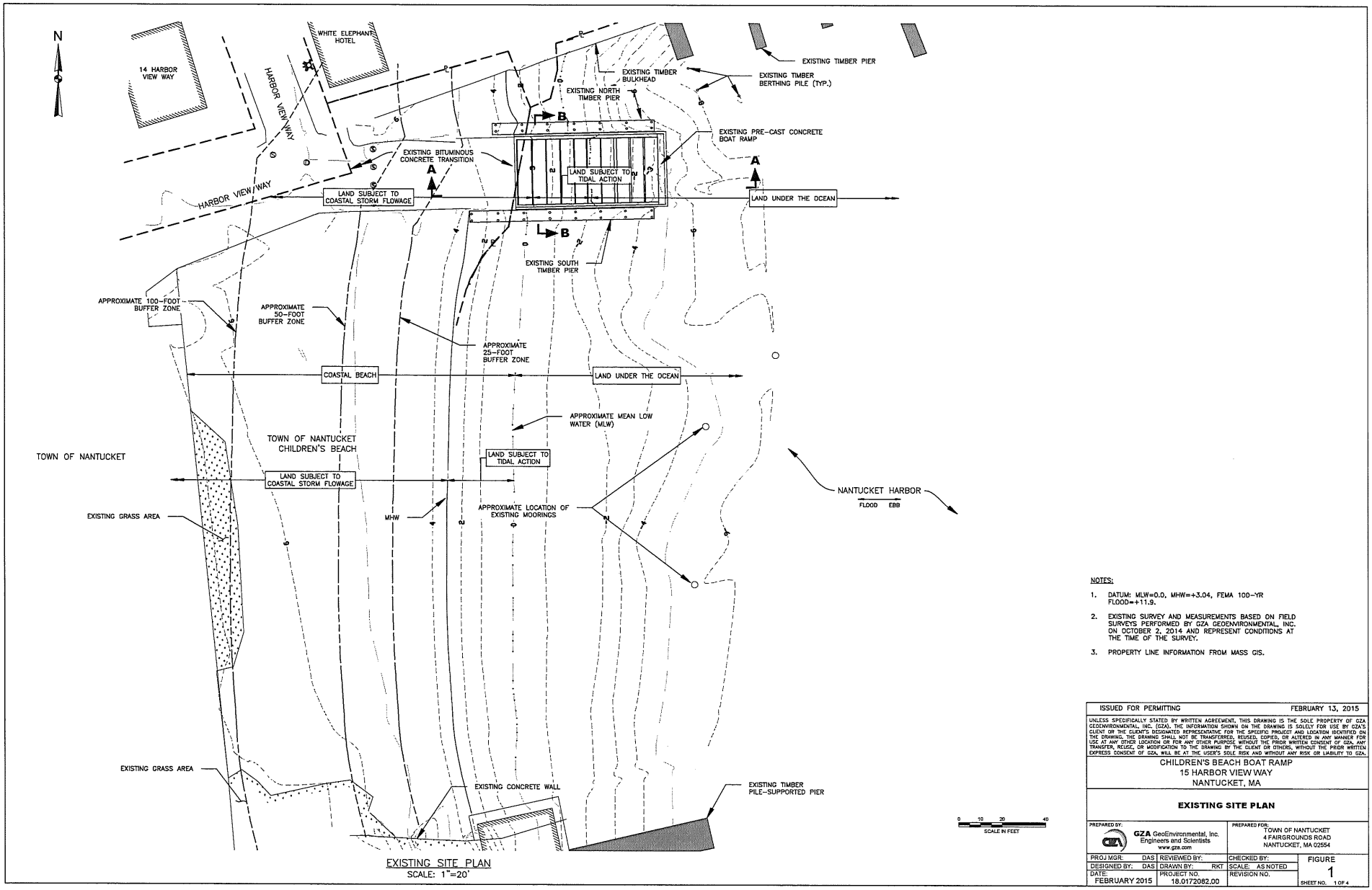

EXISTING SITE PLAN
SCALE: 1"=20'

NOTES:

1. DATUM: MLW=0.0, MHW=+3.04, FEMA 100-YR FLOOD=+11.9.
2. EXISTING SURVEY AND MEASUREMENTS BASED ON FIELD SURVEYS PERFORMED BY GZA GEOENVIRONMENTAL, INC. ON OCTOBER 2, 2014 AND REPRESENT CONDITIONS AT THE TIME OF THE SURVEY.
3. PROPERTY LINE INFORMATION FROM MASS GIS.

ISSUED FOR PERMITTING — FEBRUARY 13, 2015

UNLESS SPECIFICALLY STATED BY WRITTEN AGREEMENT, THIS DRAWING IS THE SOLE PROPERTY OF GZA GEOENVIRONMENTAL, INC. (GZA). THE INFORMATION SHOWN ON THE DRAWING IS SOLELY FOR USE BY GZA'S CLIENT OR THE CLIENT'S DESIGNATED REPRESENTATIVE FOR THE SPECIFIC PROJECT AND LOCATION IDENTIFIED ON THE DRAWING. THE DRAWING SHALL NOT BE TRANSFERRED, REUSED, COPIED, OR ALTERED IN ANY MANNER FOR USE AT ANY OTHER LOCATION OR FOR ANY OTHER PURPOSE WITHOUT THE PRIOR WRITTEN CONSENT OF GZA. ANY TRANSFER, REUSE, OR MODIFICATION TO THE DRAWING BY THE CLIENT OR OTHERS, WITHOUT THE PRIOR WRITTEN EXPRESS CONSENT OF GZA, WILL BE AT THE USER'S SOLE RISK AND WITHOUT ANY RISK OR LIABILITY TO GZA.

CHILDREN'S BEACH BOAT RAMP
15 HARBOR VIEW WAY
NANTUCKET, MA

EXISTING SITE PLAN

PREPARED BY:
GZA GeoEnvironmental, Inc.
Engineers and Scientists
www.gza.com

PREPARED FOR:
TOWN OF NANTUCKET
4 FAIRGROUNDS ROAD
NANTUCKET, MA 02554

PROJ MGR: DAS	REVIEWED BY:	CHECKED BY:	FIGURE 1
DESIGNED BY: DAS	DRAWN BY: RKT	SCALE: AS NOTED	
DATE: FEBRUARY 2015	PROJECT NO. 18.0172082.00	REVISION NO.	SHEET NO. 1 OF 4

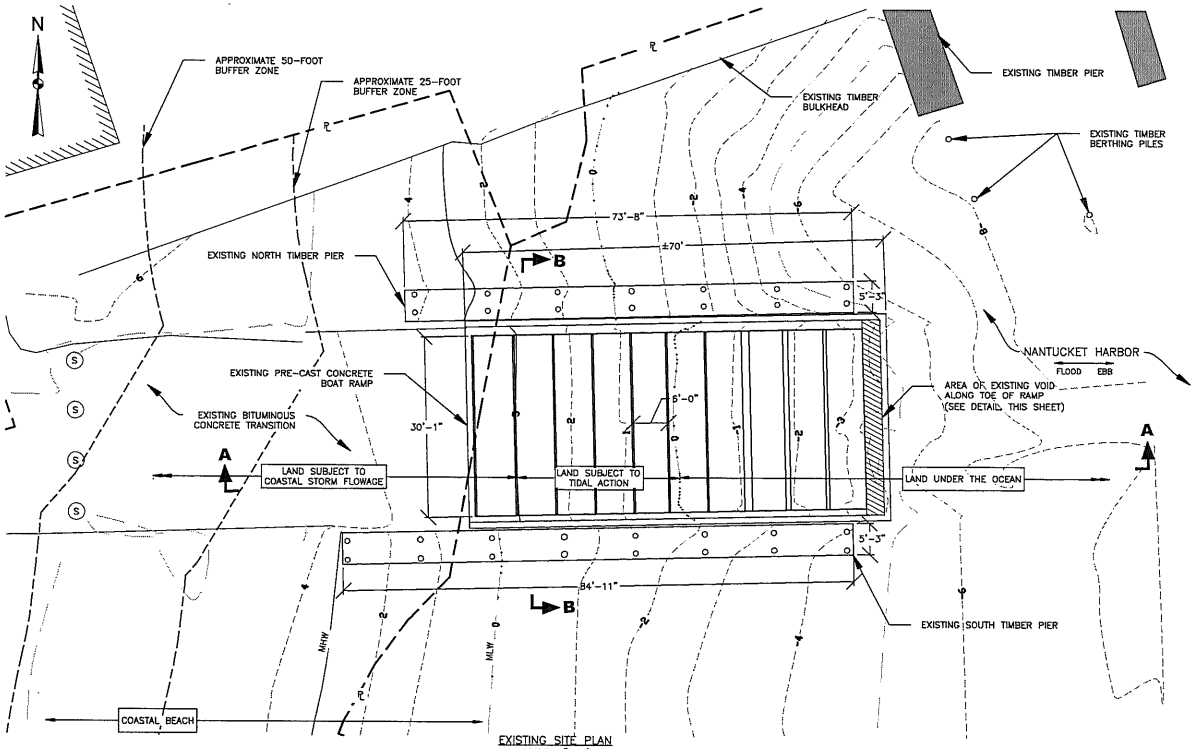

EXISTING SITE PLAN
SCALE: 1"=10'

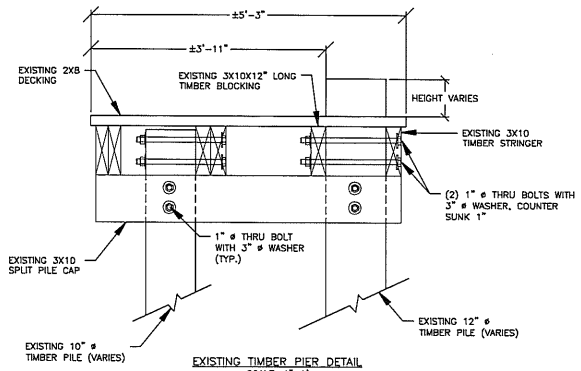

EXISTING TIMBER PIER DETAIL
SCALE: 1"=1'

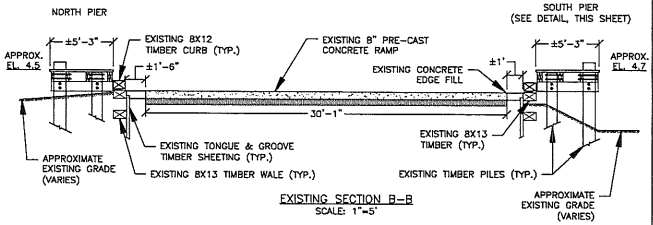

EXISTING SECTION B-B
SCALE: 1"=5'

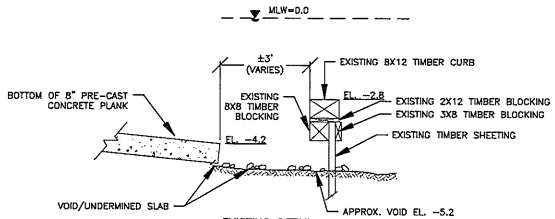

EXISTING DETAIL
SCALE: 1"=2'

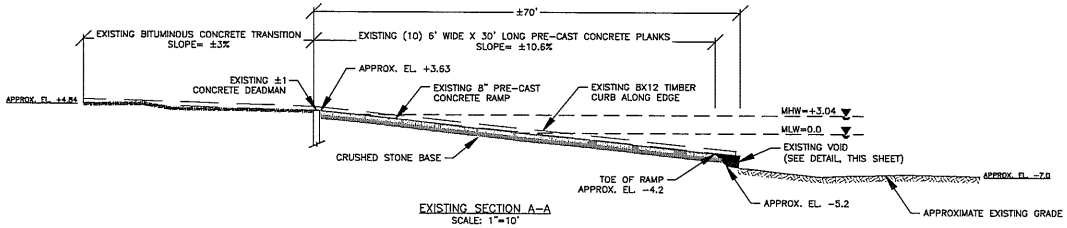

EXISTING SECTION A-A
SCALE: 1"=10'

0 1/2 1 2 SCALE IN FEET

0 1 2 4 SCALE IN FEET

0 2 1/2 5 10 SCALE IN FEET

0 5 10 20 SCALE IN FEET

ISSUED FOR PERMITTING — FEBRUARY 13, 2015

UNLESS SPECIFICALLY STATED BY WRITTEN AGREEMENT, THIS DRAWING IS THE SOLE PROPERTY OF GZA GEOENVIRONMENTAL, INC. (GZA). THE INFORMATION SHOWN ON THE DRAWING IS SOLELY FOR USE BY GZA'S CLIENT OR THE CLIENT'S DESIGNATED REPRESENTATIVE FOR THE SPECIFIC PROJECT AND LOCATION IDENTIFIED ON THE DRAWING. THE DRAWING SHALL NOT BE TRANSFERRED, REUSED, COPIED, OR ALTERED IN ANY MANNER FOR USE AT ANY OTHER LOCATION OR FOR ANY OTHER PURPOSE WITHOUT THE PRIOR WRITTEN CONSENT OF GZA. ANY TRANSFER, REUSE, OR MODIFICATION TO THE DRAWING BY THE CLIENT OR OTHERS, WITHOUT THE PRIOR WRITTEN EXPRESS CONSENT OF GZA, WILL BE AT THE USER'S SOLE RISK AND WITHOUT ANY RISK OR LIABILITY TO GZA.

CHILDREN'S BEACH BOAT RAMP
15 HARBOR VIEW WAY
NANTUCKET, MA

EXISTING CONDITIONS

PREPARED BY:
GZA GeoEnvironmental, Inc.
Engineers and Scientists
www.gza.com

PREPARED FOR:
TOWN OF NANTUCKET
4 FAIRGROUNDS ROAD
NANTUCKET, MA 02554

PROJ MGR: DAS	REVIEWED BY:	CHECKED BY:	FIGURE 2
DESIGNED BY: DAS	DRAWN BY: RKT	SCALE: AS NOTED	
DATE: FEBRUARY 2015	PROJECT NO. 15.0172082.00	REVISION NO.	SHEET NO. 2 OF 4

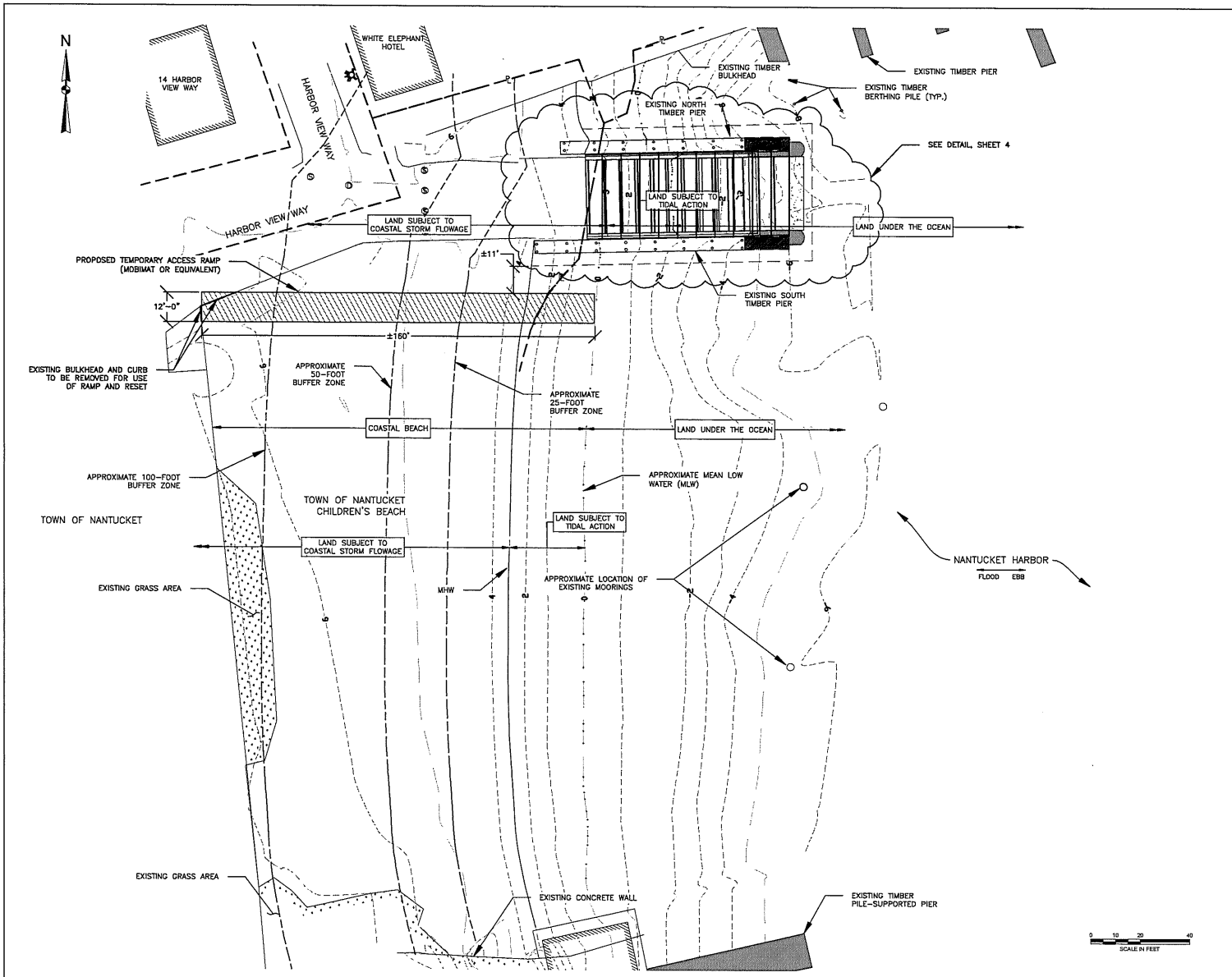

PROPOSED SITE PLAN
SCALE: 1"=20'

ISSUED FOR PERMITTING — FEBRUARY 13, 2015

UNLESS SPECIFICALLY STATED BY WRITTEN AGREEMENT, THIS DRAWING IS THE SOLE PROPERTY OF GZA GEOENVIRONMENTAL, INC. (GZA). THE INFORMATION SHOWN ON THE DRAWING IS SOLELY FOR USE BY GZA'S CLIENT OR THE CLIENT'S DESIGNATED REPRESENTATIVE FOR THE SPECIFIC PROJECT AND LOCATION IDENTIFIED ON THE DRAWING. THE DRAWING SHALL NOT BE TRANSFERRED, REUSED, COPIED, OR ALTERED IN ANY MANNER FOR USE AT ANY OTHER LOCATION OR FOR ANY OTHER PURPOSE WITHOUT THE PRIOR WRITTEN CONSENT OF GZA. ANY TRANSFER, REUSE, OR MODIFICATION TO THE DRAWING BY THE CLIENT OR OTHERS, WITHOUT THE PRIOR WRITTEN EXPRESS CONSENT OF GZA, WILL BE AT THE USER'S SOLE RISK AND WITHOUT ANY RISK OR LIABILITY TO GZA.

CHILDREN'S BEACH BOAT RAMP
15 HARBOR VIEW WAY
NANTUCKET, MA

PROPOSED SITE PLAN

PREPARED BY:
GZA GeoEnvironmental, Inc.
Engineers and Scientists
www.gza.com

PREPARED FOR:
TOWN OF NANTUCKET
4 FAIRGROUNDS ROAD
NANTUCKET, MA 02554

PROJ MGR: DAS	REVIEWED BY:	CHECKED BY:	FIGURE
DESIGNED BY: DAS	DRAWN BY: RKT	SCALE: AS NOTED	3
DATE: FEBRUARY 2015	PROJECT NO. 18.0172082.00	REVISION NO.	SHEET NO. 3 OF 4

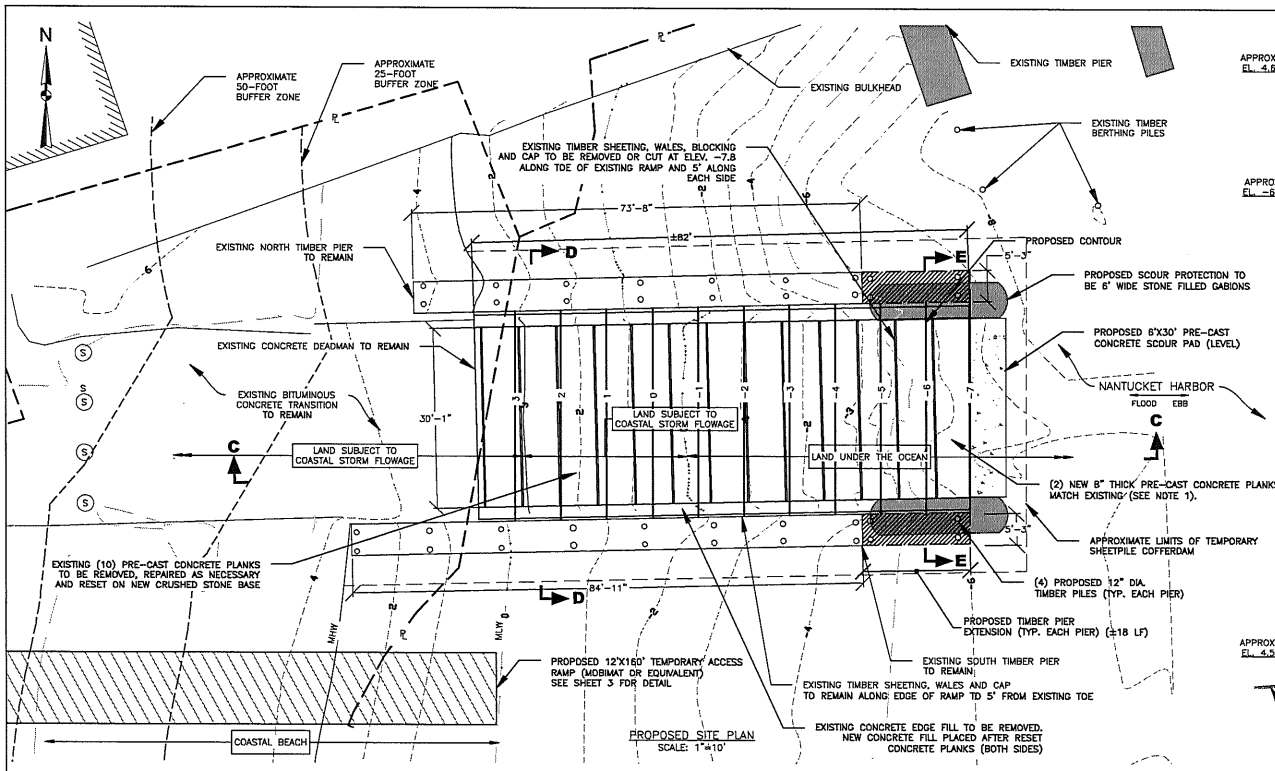

PROPOSED SITE PLAN
SCALE: 1"=10'

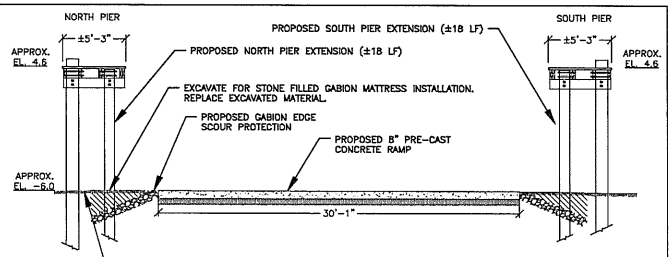

PROPOSED SECTION E-E
SCALE: 1"=5'

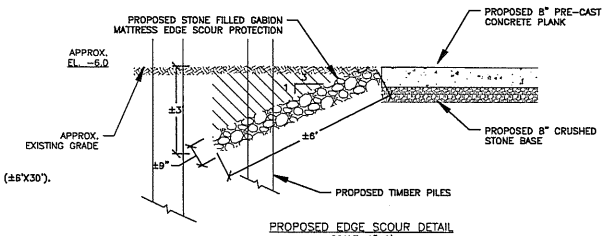

PROPOSED EDGE SCOUR DETAIL
SCALE: 1"=2'

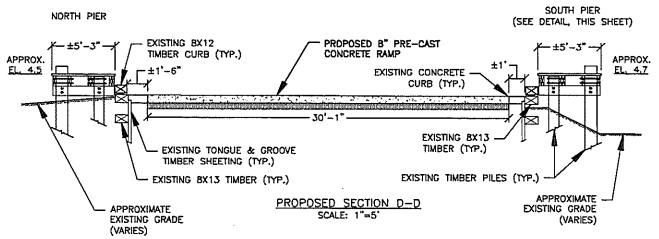

PROPOSED SECTION D-D
SCALE: 1"=5'

NOTES:

1. EXISTING CONCRETE PLANKS TO BE REMOVED, REPAIRED AS NECESSARY, STOCK PILED AND RESET TO LINES AND GRADES SHOWN ON DRAWINGS. NEW RAMP LAYOUT TO INCLUDE EXISTING SALVAGED PLANKS AND (2) 6"X30' SUPPLEMENTAL PLANKS. PLACEMENT LOCATION OF RESET AND SUPPLEMENTAL PLANKS TO BE DETERMINED BY THE ENGINEER.

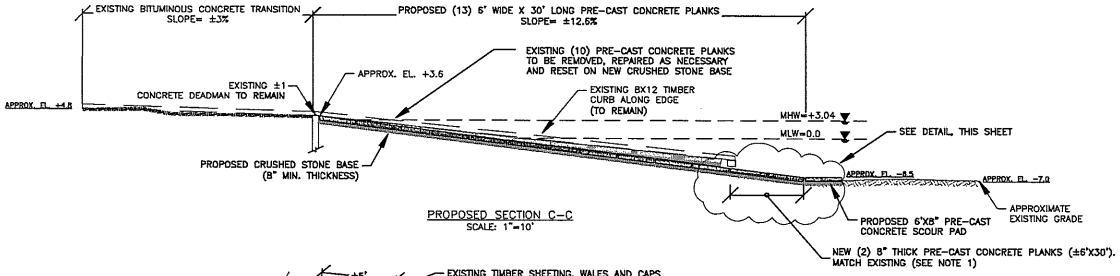

PROPOSED SECTION C-C
SCALE: 1"=10'

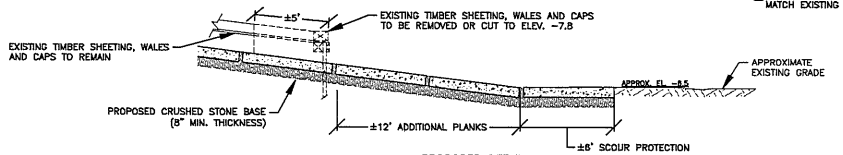

PROPOSED DETAIL
SCALE: 1"=4'

0 1/2 1 2 SCALE IN FEET
0 2 4 8 SCALE IN FEET
0 2 1/2 5 10 SCALE IN FEET
0 5 10 20 SCALE IN FEET

ISSUED FOR PERMITTING — FEBRUARY 13, 2015

UNLESS SPECIFICALLY STATED BY WRITTEN AGREEMENT, THIS DRAWING IS THE SOLE PROPERTY OF GZA GEOENVIRONMENTAL, INC. (GZA). THE INFORMATION SHOWN ON THE DRAWING IS SOLELY FOR USE BY GZA'S CLIENT OR THE CLIENT'S DESIGNATED REPRESENTATIVE FOR THE SPECIFIC PROJECT AND LOCATION IDENTIFIED ON THE DRAWING. THE DRAWING SHALL NOT BE TRANSFERRED, REUSED, COPIED, OR ALTERED IN ANY MANNER FOR USE AT ANY OTHER LOCATION OR FOR ANY OTHER PURPOSE WITHOUT THE PRIOR WRITTEN CONSENT OF GZA. ANY TRANSFER, REUSE, OR MODIFICATION TO THE DRAWING BY THE CLIENT OR OTHERS, WITHOUT THE PRIOR WRITTEN EXPRESS CONSENT OF GZA, WILL BE AT THE USER'S SOLE RISK AND WITHOUT ANY RISK OR LIABILITY TO GZA.

CHILDREN'S BEACH BOAT RAMP
15 HARBOR VIEW WAY
NANTUCKET, MA

PROPOSED IMPROVEMENTS

PREPARED BY:
GZA GeoEnvironmental, Inc.
Engineers and Scientists
www.gza.com

PREPARED FOR:
TOWN OF NANTUCKET
4 FAIRGROUNDS ROAD
NANTUCKET, MA 02554

PROJ MGR: DAS	REVIEWED BY:		CHECKED BY:		FIGURE
DESIGNED BY: DAS	DRAWN BY: RKT		SCALE: AS NOTED		4
DATE: FEBRUARY 2015	PROJECT NO. 18.0172082.00		REVISION NO.		SHEET NO. 4 OF 4

E. Signatures

This Order is valid for three years, unless otherwise specified as a special condition pursuant to General Conditions #4, from the date of issuance.

03/04/2015
1. Date of Issuance

Please indicate the number of members who will sign this form.
This Order must be signed by a majority of the Conservation Commission.

6
2. Number of Signers

The Order must be mailed by certified mail (return receipt requested) or hand delivered to the applicant. A copy also must be mailed or hand delivered at the same time to the appropriate Department of Environmental Protection Regional Office, if not filing electronically, and the property owner, if different from applicant.

Signatures:

Ernest Steinauer

Sarah Oktay

Ashley Erisman

Andrew Bennett

Bam LaFarge

Michael Glowacki

David LaFleur

☒ by hand delivery on

03/04/2015
Date

☐ by certified mail, return receipt requested, on

Date

F. Appeals

The applicant, the owner, any person aggrieved by this Order, any owner of land abutting the land subject to this Order, or any ten residents of the city or town in which such land is located, are hereby notified of their right to request the appropriate MassDEP Regional Office to issue a Superseding Order of Conditions. The request must be made by certified mail or hand delivery to the Department, with the appropriate filing fee and a completed Request of Departmental Action Fee Transmittal Form, as provided in 310 CMR 10.03(7) within ten business days from the date of issuance of this Order. A copy of the request shall at the same time be sent by certified mail or hand delivery to the Conservation Commission and to the applicant, if he/she is not the appellant.

Any appellants seeking to appeal the Department's Superseding Order associated with this appeal will be required to demonstrate prior participation in the review of this project. Previous participation in the permit proceeding means the submission of written information to the Conservation Commission prior to the close of the public hearing, requesting a Superseding Order, or providing written information to the Department prior to issuance of a Superseding Order.

The request shall state clearly and concisely the objections to the Order which is being appealed and how the Order does not contribute to the protection of the interests identified in the Massachusetts Wetlands Protection Act (M.G.L. c. 131, § 40), and is inconsistent with the wetlands regulations (310 CMR 10.00). To the extent that the Order is based on a municipal ordinance or bylaw, and not on the Massachusetts Wetlands Protection Act or regulations, the Department has no appellate jurisdiction.

G. Recording Information

Prior to commencement of work, this Order of Conditions must be recorded in the Registry of Deeds or the Land Court for the district in which the land is located, within the chain of title of the affected property. In the case of recorded land, the Final Order shall also be noted in the Registry's Grantor Index under the name of the owner of the land subject to the Order. In the case of registered land, this Order shall also be noted on the Land Court Certificate of Title of the owner of the land subject to the Order of Conditions. The recording information on this page shall be submitted to the Conservation Commission listed below.

_____
Conservation Commission

Detach on dotted line, have stamped by the Registry of Deeds and submit to the Conservation Commission.

To:

_____
Conservation Commission

Please be advised that the Order of Conditions for the Project at:

_____ _____
Project Location MassDEP File Number

Has been recorded at the Registry of Deeds of:

_____ _____ _____
County Book Page

for: _____
Property Owner

and has been noted in the chain of title of the affected property in:

_____ _____
Book Page

In accordance with the Order of Conditions issued on:

_____
Date

If recorded land, the instrument number identifying this transaction is:

_____
Instrument Number

If registered land, the document number identifying this transaction is:

_____
Document Number

_____
Signature of Applicant

Commonwealth of Massachusetts
Executive Office of Energy & Environmental Affairs

Department of Environmental Protection

Southeast Regional Office • 20 Riverside Drive, Lakeville MA 02347 • 508-946-2700

Charles D. Baker
Governor

Karyn E. Polito
Lieutenant Governor

Matthew A. Beaton
Secretary

Martin Suuberg
Commissioner

Town of Nantucket
c/o David Smith
GZA GeoEnvironmental, Inc.
372 Merrimac Street
Newburyport, MA 02135

RE: ISSUANCE OF CHAPTER 91 WATERWAYS LICENSE
Waterways License Application No. W15-4402, License No. 13987
Town of Nantucket, Nantucket Harbor, 15 Harbor View Way, Nantucket

SEP 25 2015

Dear Sir or Madam,

The Department of Environmental Protection hereby issues the above-referenced Waterways License, enclosed, authorizing you to perform certain activities pursuant to M.G.L. c. 91, the Public Waterfront Act and its regulations 310 CMR 9.00. Any change in use or alteration of any structure or fill not authorized by this license may render this license void.

This License is not final until all administrative appeal periods from this License have elapsed, or if such an appeal has been taken, until all proceedings before the Department have been completed. The appeal period is for twenty-one (21) days. No work shall be undertaken until the License has become final and has been recorded in the Registry of Deeds or the Land Court for the district in which the land is located, within the chain of title of the affected property

RECORDING OF THE LICENSE

This License must be recorded at the Registry of Deeds or, if registered land, with the Land Registration Office within sixty (60) days from the date of license issuance. In the case of recorded land, the License shall also be noted in the Registry's Grantor Index under the name of the owner of the land upon which the project is located. In the case of the registered land, the License shall be noted on the Land Court Certificate of Title of the owner of the land upon which the project is located. **Failure to record this license within sixty (60) days of the date of issuance will render this license void pursuant to 310 CMR 9.18.**

A Waterways License Recordation Notice Form has been enclosed for your use in notifying the Department of the recording information for this License. **Failure to notify the Department of the recording of this license is a violation of 310 CMR 9.00 and is subject to enforcement action by the Department.**

REQUEST CERTIFICATE OF COMPLIANCE

Pursuant to 310 CMR 9.19, once the proposed project is completed you must file a Request for a Certificate of Compliance form, BRP WW05, within sixty (60) days of completion but in no event later than five (5) years from the License's issuance date. The license for any project for which such a request is not filed and certificate issued may be revoked pursuant to 310 CMR 9.26.

NOTICE OF APPEAL RIGHTS

Who has the right to appeal?

The following persons shall have the right to an adjudicatory hearing concerning this decision by the Department to grant or deny a license or permit, in accordance with 310 CMR 9.17(1): (a) an applicant who has demonstrated property rights in the lands in question, or which is a public agency; (b) any person aggrieved by the decision of the Department to grant a license or permit who has submitted written comments within the public comment period; (c) ten (10) residents of the Commonwealth who, pursuant to M.G.L. c. 30A, § 10A, have submitted comments within the public comment period with at least 5 of the 10 residents residing in the municipality(s) in which the license or permitted activity is located. The appeal shall clearly and specifically state the facts and grounds for the appeal and the relief sought, and each appealing resident shall file an affidavit stating the intent to be part of the group and to be represented by its authorized representative; (d) the municipal official in the affected municipality who has submitted written comments within the public comment period; and (e) CZM, for any project identified in 310 CMR 9.13(2) (a) for CZM participation or, in an Ocean Sanctuary, if it has filed a notice of participation within the public comment period.

How can I request an adjudicatory hearing?

A person requesting an adjudicatory hearing must submit a "Notice of Claim" to the Department, with a copy of the MassDEP Transmittal Form and including the detail specified below, within twenty-one (21) days of the date of issuance of this decision. The MassDEP Fee Transmittal Form is available at the following website: http://www.mass.gov/eea/docs/dep/service/adr/adjherfm.doc. The Notice of Claim must be made in writing and sent by certified mail or hand delivery to:

Case Administrator
MassDEP
One Winter Street, 2nd Floor
Boston, MA 02108

A copy of the complete Notice of Claim must be sent at the same time by certified mail or hand delivery to: (1) the applicant, (2) the municipal official of the city or town where the project is located, and (3) the issuing office of the MassDEP, which in this case is located at:

MassDEP Waterways Regulation Program
20 Riverside Drive
Lakeville, MA 02347

The MassDEP Fee Transmittal Form and a valid check payable to the Commonwealth of Massachusetts in the amount of one hundred dollars ($100) must be mailed to:

Mass. Department of Environmental Protection
Commonwealth Master Lockbox
P.O. Box 4062
Boston, Massachusetts 02211

What information must be included in the hearing request?

Pursuant to 310 CMR 9.17(3), any Notice of Claim requesting an adjudicatory hearing must include the following information:

(a) the MassDEP Waterways Application File Number;
(b) the complete name, address, fax number and telephone number of the applicant;
(c) the address of the project;
(d) the complete name, address, fax number, and telephone number of the party filing the request and, if represented by counsel, the name, address, fax number, and phone number of the attorney;
(e) if claiming to be a person aggrieved, the specific facts that demonstrate that the party satisfies the definition of "aggrieved person" found in 310 CMR 9.02;
(f) a clear statement that a formal adjudicatory hearing is being requested;
(g) a clear statement of the facts which are the grounds for the proceedings, the specific objections to the MassDEP's written decision, and the relief sought through the adjudicatory hearing, including specifically the changes desired in the final written decision; and
(h) a statement that a copy of the request has been sent to: the applicant and the municipal official of the city or town where the project is located.

Dismissal of request

The request for appeal will be dismissed if the filing fee is not paid, unless the appellant is exempt or is granted a waiver. The filing fee is not required if the appellant is a city or town (or municipal agency), county, or district of the Commonwealth of Massachusetts, or a municipal housing authority. The Department may waive the adjudicatory hearing filing fee pursuant to 310 CMR 4.06(2) for a person who shows that paying the fee will create an undue financial hardship. A person seeking a waiver must file an affidavit setting forth the facts believed to support the claim of undue financial hardship together with the hearing request as provided above.

Please feel free to contact Carlos T. B. Fragata of the Waterways Regulation Program, (508) 946-2873, if you have any questions pertaining to the recording of your Waterways License or Certificate of Compliance.

Sincerely,

David E. Hill

for David E. Hill, Environmental Engineer
Wetlands and Waterways Program

cc: w/enc. Ben Lynch, Waterways Section Chief, DEP Boston
Office of Coastal Zone Management
Nantucket Harbormaster
Nantucket Conservation Commission
Town of Nantucket

Carlos T. B. Fragata
Department of Environmental Protection
Waterways Regulation Program
20 Riverside Drive
Lakeville, MA 02347

RE: Waterways Application No. W15-4402, License No. 13987, Transmittal #X264273
Nantucket Harbor, Nantucket, Nantucket County

Dear Mr. Fragata:

This is to notify you that the above referenced Waterways license was recorded with the appropriate Registry of Deeds / Land Court for this project location and to provide your office with the following recordation information.

Date of Recordation: _____

County Registry of Deeds: _____

Book number_____ and page number(s) _____

Land Court: _____

Land Court Lot # _____ Plan # _____

Certificate Document Number _____

We will notify your office in writing of the date the authorized work or change in use is completed.

Sincerely,

_____, Chapter 91 Waterways Licensee

LICENSE VOID
IF NOT RECORDED
WITHIN 60 DAYS
OF ISSUANCE

SIGNAGE SPECIFICATIONS - MassDEP Waterways Regulation Program (Updated September 20, 2012)

- Signs shall utilize durable materials and methods of construction and maintained in good condition.
- Signs shall be a minimum of 5" x 10" (or 50 square inches) in size. Letter height shall be a minimum of ½".
- The MassDEP Chapter 91 License number shall be displayed on all signs (as applicable).
- Each sign shall indicate that public passage is allowed for on-foot lateral access along the shoreline for the purpose of fishing, fowling, navigation and strolling.
- Signs shall be posted on both sides of the pier or structure, at the mean high water shoreline, or as directed by the Chapter 91 License (see Special Waterways Conditions, Page #2 or Page #3 for Simplified Licenses).

An example of an acceptable sign is provided below.

The Commonwealth of Massachusetts

No. 13987

Whereas, **Town of Nantucket**

of -- Nantucket -- in the County of -- Nantucket -- and Commonwealth aforesaid, -- has applied to the Department of Environmental Protection for a license to -- reconstruct, enlarge, and maintain a pre-cast concrete boat ramp, and extend an existing pier ---------

and has submitted plans of the same; and whereas due notice of said application, ~~and of the time and place fixed for a hearing thereon~~, has been given, as required by law, to the -- Board of Selectmen -- of the Town of -- Nantucket. ----

NOW, said Department, having heard all parties desiring to be heard, and having fully considered said application, hereby, subject to the approval of the Governor, authorizes and licenses the said ----

Town of Nantucket --, subject to the provisions of the ninety-first chapter of the General Laws, and of all laws which are or may be in force applicable thereto, to -- reconstruct, enlarge, and maintain a pre-cast concrete boat ramp, and extend an existing pier ------

in and over the waters of -- Nantucket Harbor -- at 15 Harbor View Way --, in the -- Town -- of -- Nantucket -- and in accordance with the locations shown and details indicated on the accompanying DEP License Plan No. 13987 (6 sheet(s)).

The structures hereby authorized shall be limited to the following uses: provide public access to navigable waters.

Existing structures and/or uses previously authorized under DEP License No. 10021 (issued 2004) and DPW License No. 5943 (issued 1971) shall be maintained in accordance with the terms and conditions of said license and plans.

The term for this license is unlimited in accordance with 310 CMR 9.15(1)(c)].

SPECIAL WATERWAYS CONDITIONS:

1. In accordance with any license condition, easement, or other public right of lateral passage that exists on the subject property lying between the high and low watermarks, the Licensee shall allow the public in the exercise of such rights to pass freely around all structures within such intertidal area. Accordingly, the Licensee shall place and maintain, in good repair, a public access sign on both the northerly/southerly sides of the boat ramp authorized herein. Said signs shall be designed in accordance with the signage specifications provided by the Department, attached hereto, and be posted. Nothing in this condition shall be construed as preventing the Licensee from excluding the public from portions of said structure(s) or property not intended for lateral passage.

2. In partial compensation for public use of structures on tidelands of the Commonwealth, which interferes with the rights of the public to use such lands, the Licensee shall allow the public to pass on foot, for any purpose and from dawn to dusk, within the area of the subject property lying seaward of the high water mark. This condition shall not be construed to prevent the Licensee from taking reasonable measures to discourage unlawful activities by users of the area(s) intended for public passage, including but not limited to trespassing on the adjacent private areas and deposit of refuse of any kind or nature in the water or on the shore. Further, the exercise by the public of free on-foot passage in accordance with this condition shall be considered a permitted use to which the limited liability provisions of M.G.L. c.21, s.17c apply.

3. No dredging (including, but not limited to effects of prop wash) is permitted herein.

4. Any silt-producing activities shall be prohibited from January 15 through May 31 of any year in order to protect winter flounder, spawning and juvenile development. An exception to this time-of-year (TOY) prohibition will be allowed if work is performed behind a cofferdam that is installed/uninstalled outside the TOY prohibition and dewatering of the cofferdam doesn't produce siltation into the waterway.

5. All work authorized herein shall be completed within five (5) years of the date of license issuance. Said construction period may be extended by the Department for one or more one year periods without public notice, provided that the Applicant submits to the Department, thirty (30) days prior to the expiration of said construction period, a written request to extend the period and provides an adequate justification for said extension.

6. Within sixty (60) days of completion of the licensed project, the Licensee shall request in writing that the Department issue a Certificate of Compliance in accordance with 310 CMR 9.19. The request shall be accompanied by a certification by a registered professional engineer licensed in the Commonwealth that the project was completed in accordance with the License.

Duplicate of said plan, number 13987 is on file in the office of said Department, and original of said plan accompanies this License, and is to be referred to as a part hereof.

STANDARD WATERWAYS LICENSE CONDITIONS

1. Acceptance of this Waterways License shall constitute an agreement by the Licensee to conform with all terms and conditions stated herein.

2. This License is granted upon the express condition that any and all other applicable authorizations necessitated due to the provisions hereof shall be secured by the Licensee prior to the commencement of any activity or use authorized pursuant to this License.

3. Any change in use or any substantial structural alteration of any structure or fill authorized herein shall require the issuance by the Department of a new Waterways License in accordance with the provisions and procedures established in Chapter 91 of the Massachusetts General Laws. Any unauthorized substantial change in use or unauthorized substantial structural alteration of any structure or fill authorized herein shall render this Waterways License void.

4. This Waterways License shall be revocable by the Department for noncompliance with the terms and conditions set forth herein. This license may be revoked after the Department has given written notice of the alleged noncompliance to the Licensee and those persons who have filed a written request for such notice with the Department and afforded them a reasonable opportunity to correct said noncompliance. Failure to correct said noncompliance after the issuance of a written notice by the Department shall render this Waterways License void and the Commonwealth may proceed to remove or cause removal of any structure or fill authorized herein at the expense of the Licensee, its successors and assigns as an unauthorized and unlawful structure and/or fill.

5. The structures and/or fill authorized herein shall be maintained in good repair and in accordance with the terms and conditions stated herein and the details indicated on the accompanying license plans.

6. Nothing in this Waterways License shall be construed as authorizing encroachment in, on or over property not owned or controlled by the Licensee, except with the written consent of the owner or owners thereof.

7. This Waterways License is granted subject to all applicable Federal, State, County, and Municipal laws, ordinances and regulations including but not limited to a valid final Order of Conditions issued pursuant to the Wetlands Protection Act, G.L. Chapter 131, s.40.

8. This Waterways License is granted upon the express condition that the use of the structures and/or fill authorized hereby shall be in strict conformance with all applicable requirements and authorizations of the DEP, Division of Wetlands and Waterways.

9. This License authorizes structure(s) and/or fill on:

__ Private Tidelands. In accordance with the public easement that exists by law on private tidelands, the licensee shall allow the public to use and to pass freely upon the area of the subject property lying between the high and low water marks, for the purposes of fishing, fowling, navigation, and the natural derivatives thereof.

_X_ Commonwealth Tidelands. The Licensee shall not restrict the public's right to use and to pass freely, for any lawful purpose, upon lands lying seaward of the low water mark. Said lands are held in trust by the Commonwealth for the benefit of the public.

__ Great Pond of the Commonwealth. The Licensee shall not restrict the public's right to use and to pass freely upon lands lying seaward of the high water mark for any lawful purpose.

__Navigable River and Streams. The Licensee shall not restrict the public's right to use and pass freely, for any lawful purpose, in the Waterways.

No restriction on the exercise of these public rights shall be imposed unless otherwise expressly provided in this license.

10. Unless otherwise expressly provided by this license, the licensee shall not limit the hours of availability of any areas of the subject property designated for public passage, nor place any gates, fences, or other structures on such areas in a manner that would impede or discourage the free flow of pedestrian movement thereon.

The amount of tidewater displaced by the work hereby authorized has been ascertained by said Department, and compensation thereof has been made by the said -- Town of Nantucket -- by paying into the treasury of the Commonwealth -- zero dollars and zero cents ($0.00) -- for each cubic yard so displaced, being the amount hereby assessed by said Department (0.0 cy = $ 0.00).

Nothing in this License shall be so construed as to impair the legal rights of any person.

This License shall be void unless the same and the accompanying plan are recorded within 60 days from the date hereof, in the Registry of Deeds for the County of Nantucket.

IN WITNESS WHEREAS, said Department of Environmental Protection have hereunto set their hands this 25th day of September in the year two thousand fifteen.

Commissioner _____

Department
of Environmental
Protection

for Program Chief David E. Hill

THE COMMONWEALTH OF MASSACHUSETTS

This license is approved in consideration of the payment into the treasury of the Commonwealth by the said -- Town of Nantucket --

of the further sum of -- zero dollars and zero cents ($0.00) --

the amount determined by the Governor as a just and equitable charge for rights and privileges hereby granted in the land of the Commonwealth.

BOSTON,

Approved by the Governor.

Governor

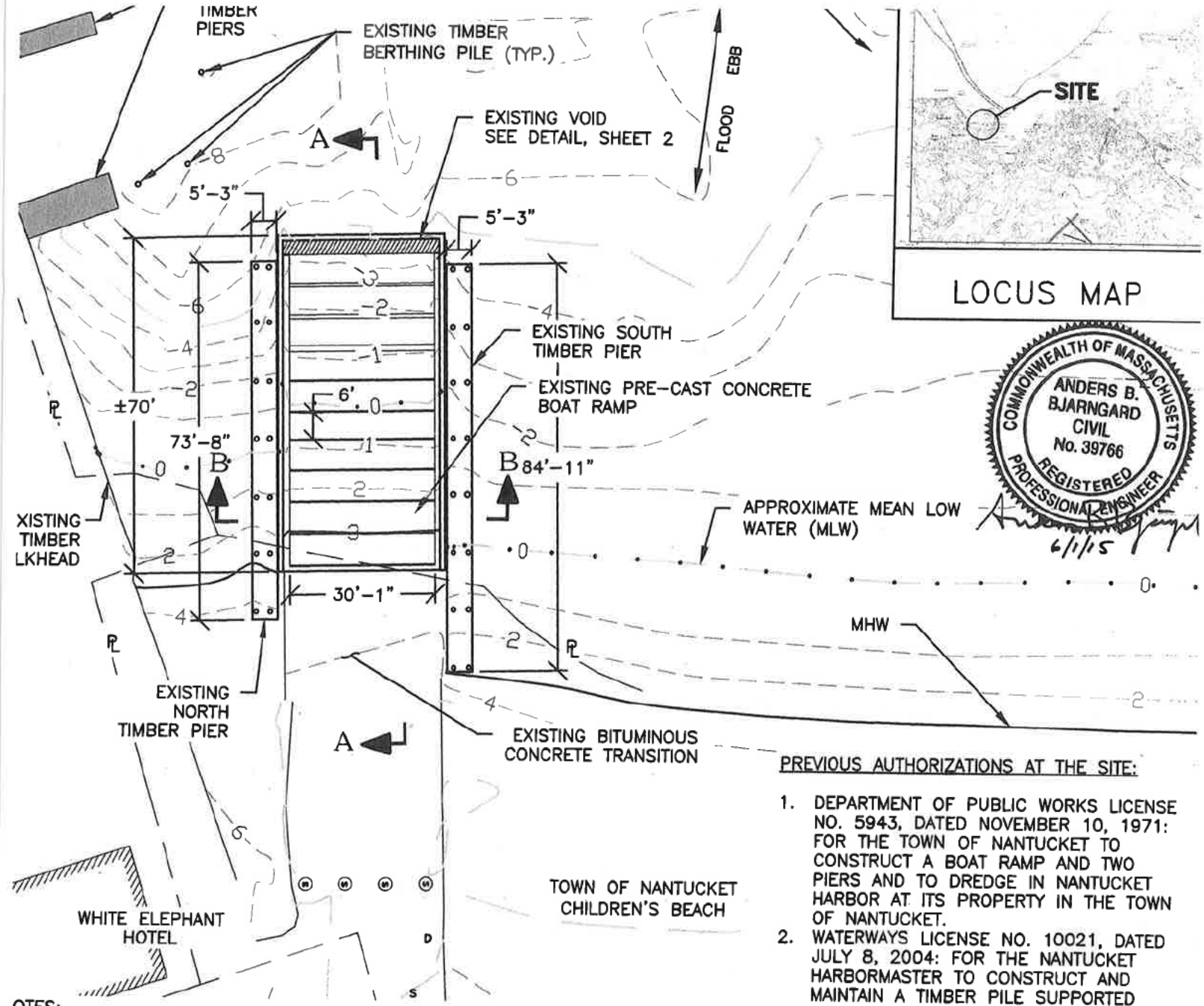

PREVIOUS AUTHORIZATIONS AT THE SITE:

1. DEPARTMENT OF PUBLIC WORKS LICENSE NO. 5943, DATED NOVEMBER 10, 1971: FOR THE TOWN OF NANTUCKET TO CONSTRUCT A BOAT RAMP AND TWO PIERS AND TO DREDGE IN NANTUCKET HARBOR AT ITS PROPERTY IN THE TOWN OF NANTUCKET.
2. WATERWAYS LICENSE NO. 10021, DATED JULY 8, 2004: FOR THE NANTUCKET HARBORMASTER TO CONSTRUCT AND MAINTAIN A TIMBER PILE SUPPORTED PIER, TIMBER SHEETING, BITUMINOUS AND CONCRETE BOAT RAMP AND WAVE BARRIER WITH REMOVABLE POST.

OTES:

- DATUM: MLW=0.0, MHW=+3.04, FEMA 100-YR FLOOD=+11.9.
- EXISTING SURVEY AND MEASUREMENTS BASED ON FIELD SURVEYS PERFORMED BY GZA GEOENVIRONMENTAL, INC. ON OCTOBER 2, 2014 AND REPRESENT CONDITIONS AT THE TIME OF THE SURVEY.
- PROPERTY LINE INFORMATION FROM MASS GIS.

0' 15' 30'

SHEET 1 OF 6
MARCH 2015
REV JUNE 2015

EXISTING SITE PLAN
1"=30'

EXISTING GRASS AREA

AN ACCOMPANYING PETITION OF:

IE TOWN OF NANTUCKET TO RECONSTRUCT, PAND AND MAINTAIN A PRE-CAST CONCRETE AT RAMP, TIMBER PIER EXTENSION AND PROVEMENTS AT 15 HARBOR VIEW WAY IN NTUCKET HARBOR, NANTUCKET COUNTY, NTUCKET, MASSACHUSETTS

LICENSE PLAN NO. 13987
Approved by Department of Environmental Protection of Massachusetts
David E. Fill
SEP 25 2015

AM NO. 13987
Department of Environmental Protection
SEP 25 2015

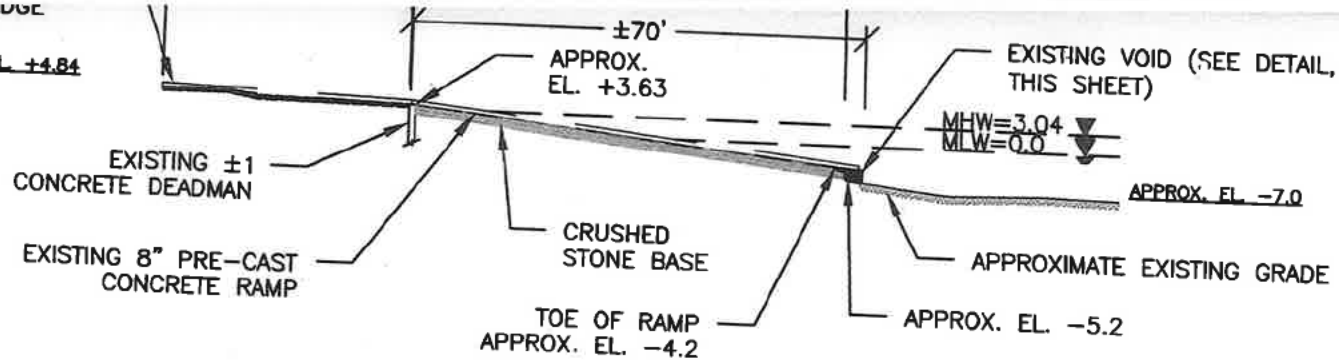

EXISTING SECTION A–A
SCALE: 1"=30'

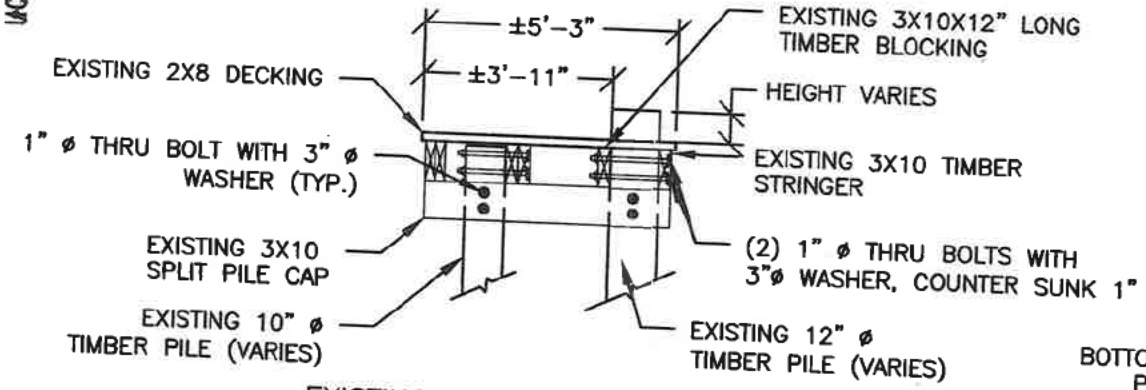

EXISTING TIMBER PIER DETAIL
SCALE: 1"=4'

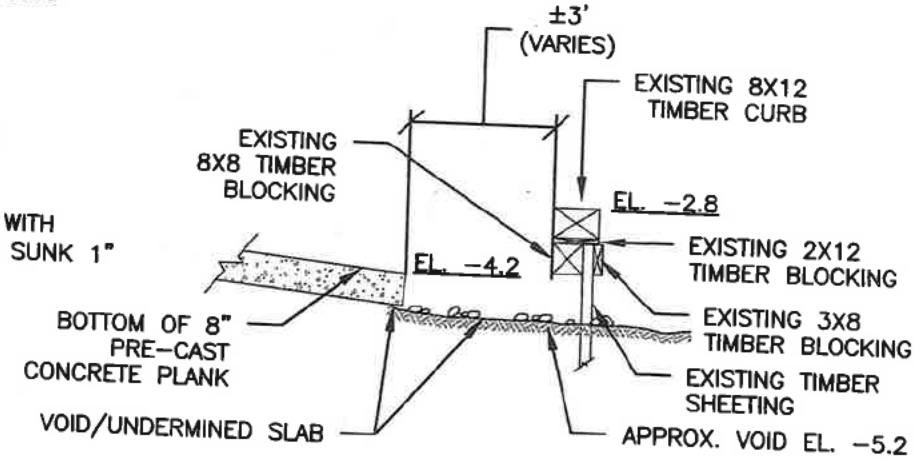

EXISTING DETAIL
SCALE: 1"=4'

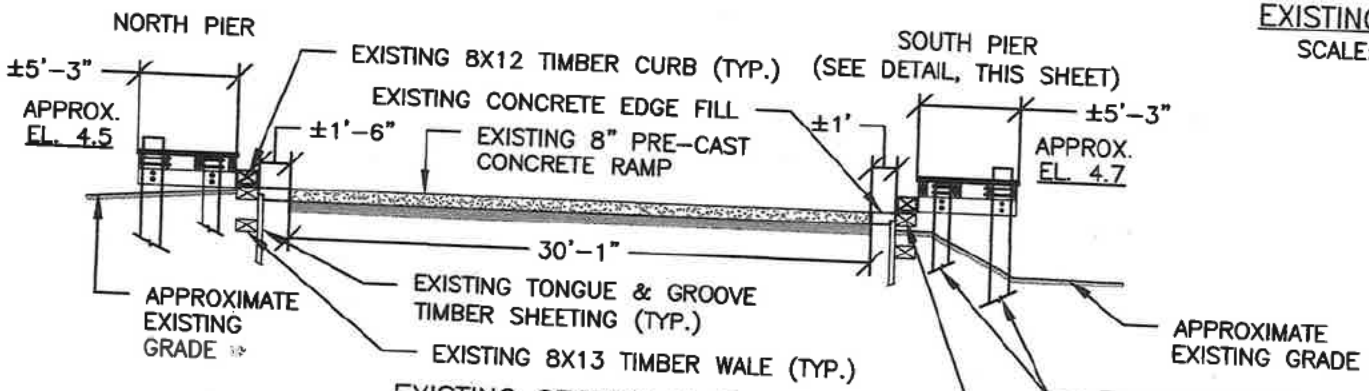

EXISTING SECTION B–B
SCALE: 1"=10'

6/1/15

SHEET 2 OF 6
MARCH 2015
REV JUNE 2015

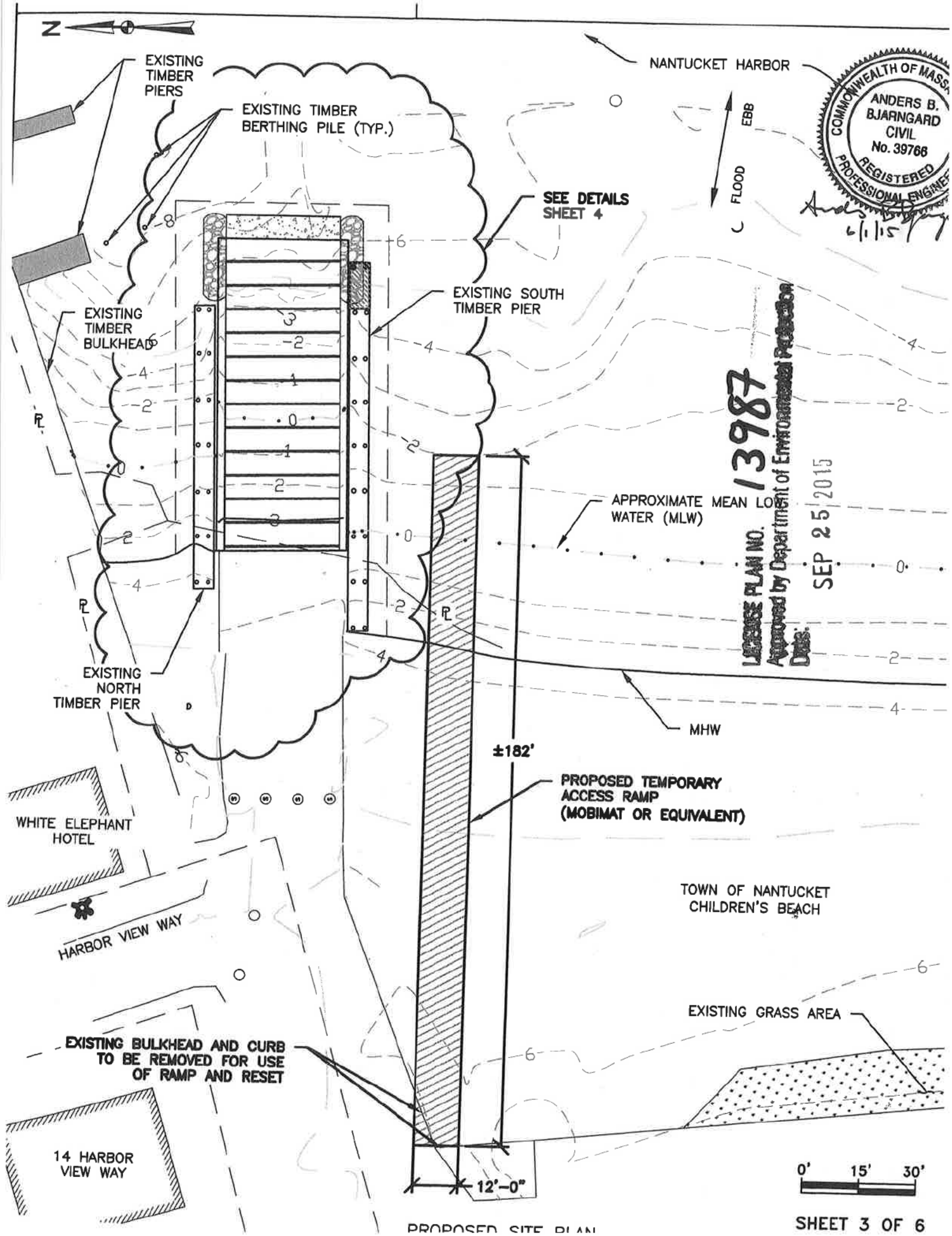

PROPOSED SITE PLAN

SHEET 3 OF 6

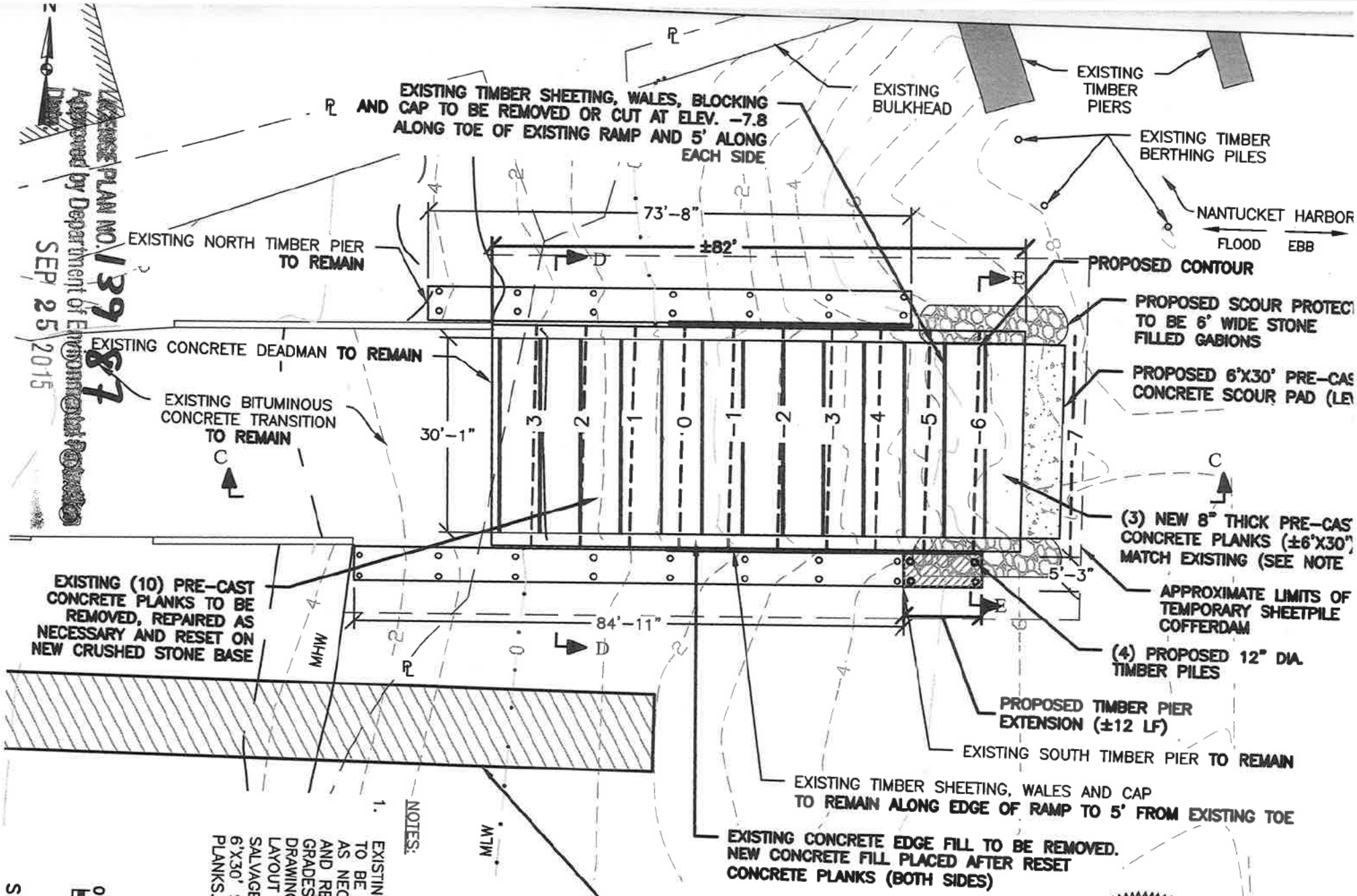

NOTES:

1. EXISTING CONCRETE PLANKS TO BE REMOVED, REPAIRED AS NECESSARY, STOCK PILED AND RESET TO LINES AND GRADES SHOWN ON DRAWINGS. NEW RAMP LAYOUT TO INCLUDE EXISTING SALVAGED PLANKS AND (3) 6'X30' SUPPLEMENTAL PLANKS.

PROPOSED SITE PLAN
SCALE: 1"=20'

COMMONWEALTH OF MASSACHUSETTS
ANDERS B. BJARNGARD
CIVIL
No. 39766
REGISTERED PROFESSIONAL ENGINEER

SHEET 4 OF 6
MARCH 2015
REV AUG 2015

LICENSE PLAN NO. 1397
Approved by Department of Environmental Protection
SEP 25 2015

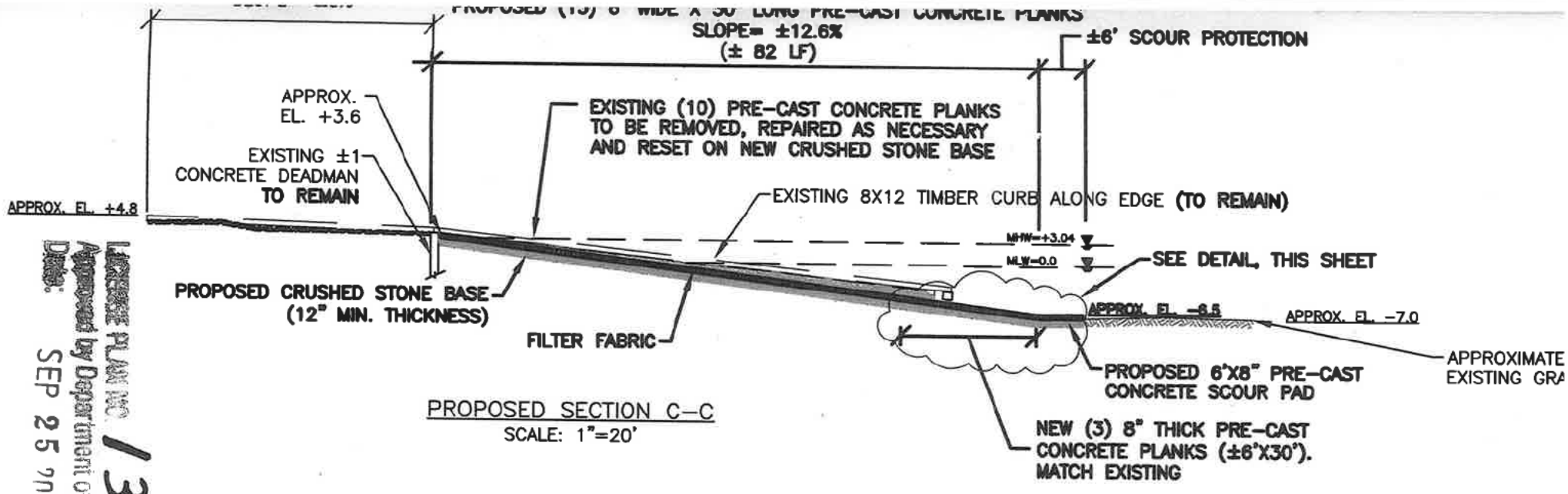

PROPOSED SECTION C–C
SCALE: 1"=20'

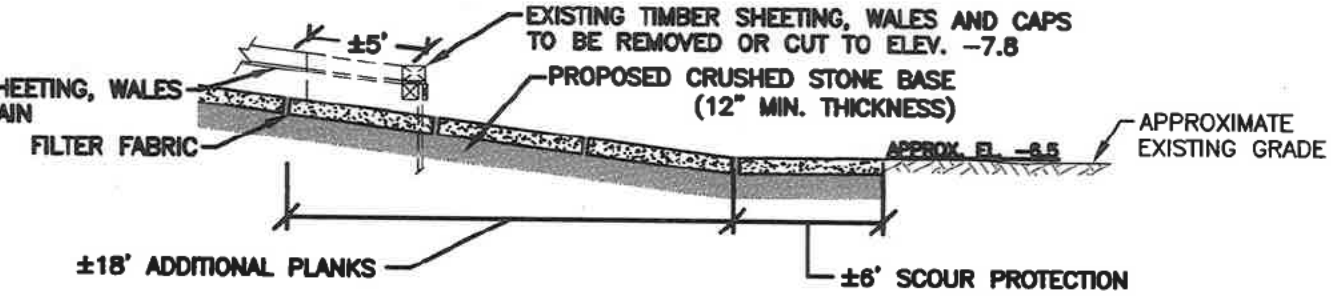

PROPOSED DETAIL
SCALE: 1"=8'

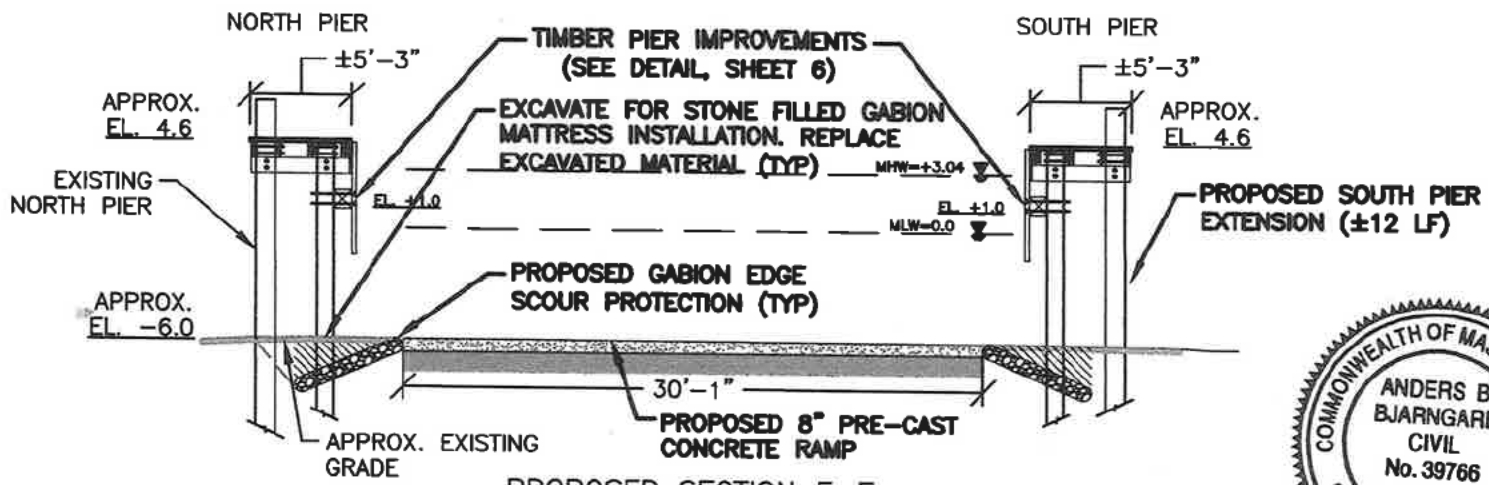

PROPOSED SECTION E–E
SCALE: 1"=10'

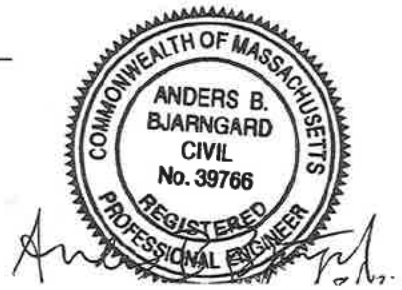

LICENSE PLAN NO. 13987
Approved by Department of Environmental Protection
Date: SEP 25 2015

SHEET 5 OF 6
MARCH 2015
REV AUG 2015

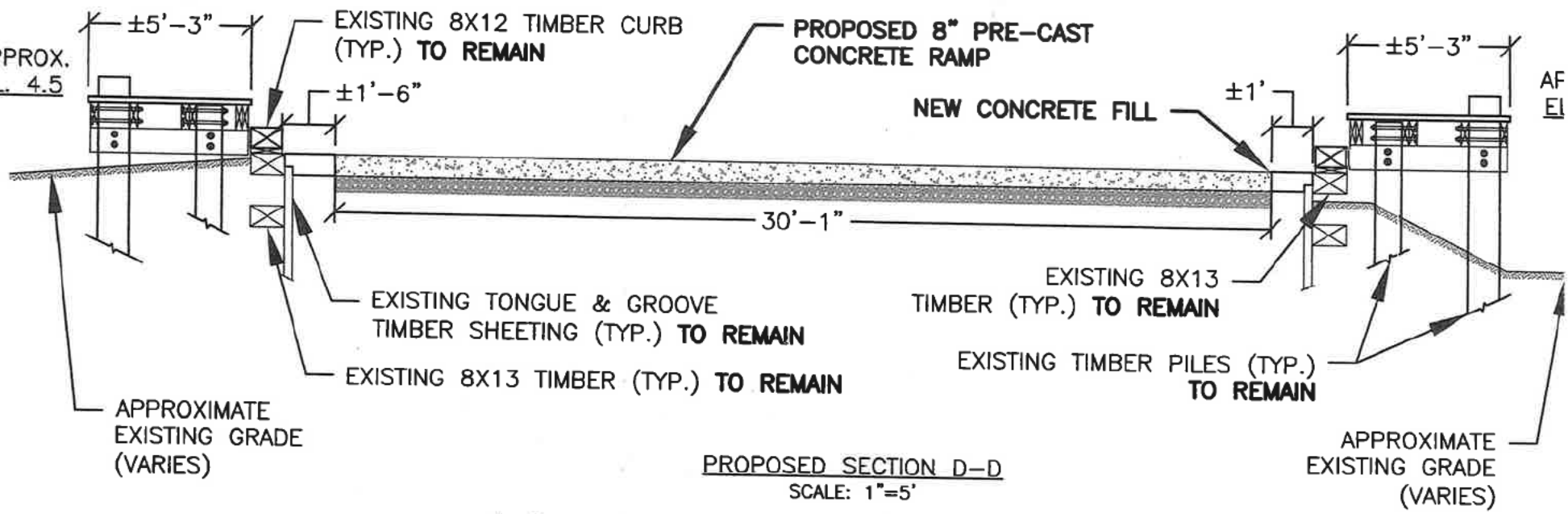

PROPOSED SECTION D-D
SCALE: 1"=5'

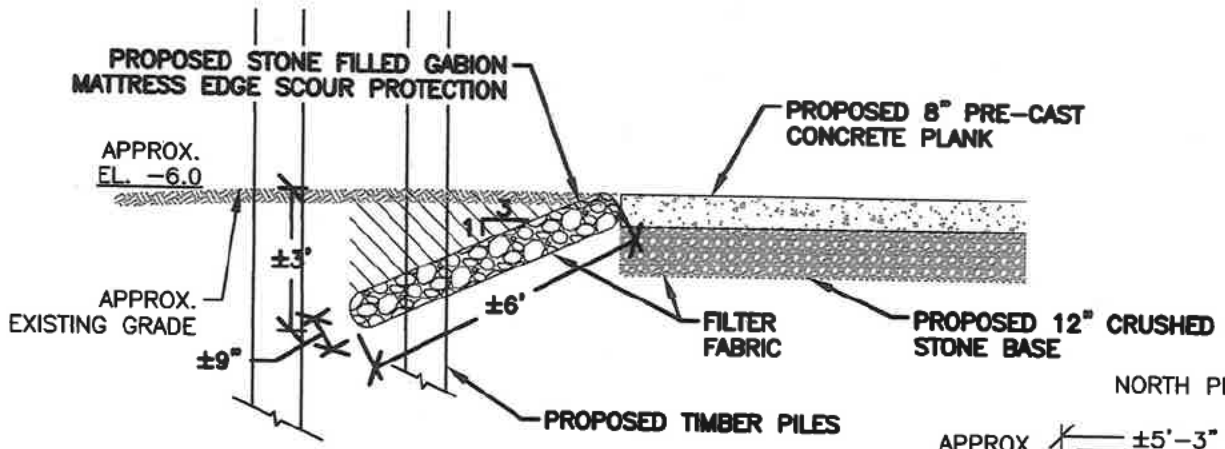

PROPOSED EDGE SCOUR DETAIL
SCALE: 1"=4'

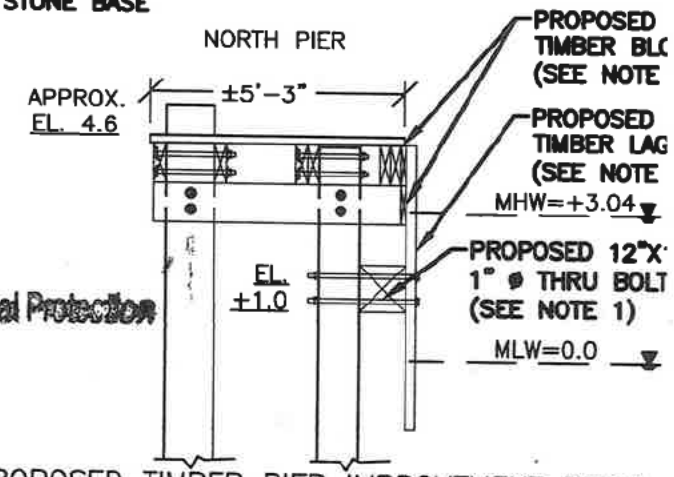

PROPOSED TIMBER PIER IMPROVEMENT DETAIL

NOTES:

1. TIMBER PIER IMPROVEMENTS INCLUDE INSTALLATION OF TIMBER WALE, LAGGING AND BLOCKING TO EXISTING TIMBER PIERS (±36 LF) AND SOUTH PIER EXTENSION (±12 LF).

0' 2.5' 5'

0' 2' 4'

COMMONWEALTH OF MASSACHUSETTS
ANDERS B. BJARNGARD
CIVIL
No. 39766
REGISTERED PROFESSIONAL ENGINEER

LICENSE PLAN NO. 13987
Approved by Department of Environmental Protection
Date: SEP 25 2015

SHEET 6 OF 6
MARCH 2015
REV JUNE 201

DEPARTMENT OF THE ARMY
US ARMY CORPS OF ENGINEERS
NEW ENGLAND DISTRICT
696 VIRGINIA ROAD
CONCORD MA 01742-2751

30 June 2016

Regulatory Division
File Number: NAE-2015-00623

Town of Nantucket, Massachusetts
Attn: Charles Gibson
4 Fairgrounds Road
Nantucket, Massachusetts

Dear Mr. Gibson:

We have reviewed your application to retain, construct, and maintain a boat ramp in on Children's Beach. This work will entail the removal, rehabilitation, and re-setting of approximately 2,466.6 sf of pre-cast concrete planks placed on a bed of crushed stone. A 6' by 30' pre-cast concrete scour pad will be installed at the outer end of the ramp and two 6' wide by 22.5' stone-filled gabions will be buried at either side of the outer end. A bituminous concrete transition area of approximately 976 sf (below HTL) will be retained and maintained. A 5' 3" by 73' 8" pile and timber pier on the north side of the ramp and a pile and timber pier with the final dimensions of 5' 3" wide by 96' 11" on the south side of the ramp will be retained and maintained. A temporary 12' wide by 182' long access ramp (63' of which will be located below the HTL), constructed of Mobimat or the equivalent, will be installed next to the work area. This will be used for small boats during construction. A sheet metal cofferdam will be constructed to enclose 1,451.1 sf of intertidal area to allow construction to be performed in the dry. A turbidity/siltation boom will be used around the work site during installation and removal of the cofferdam.

This project is located in Nantucket Harbor at 15 Harbor View Way, Nantucket, Massachusetts. The work is shown on the enclosed plans entitled "CHILDREN'S BEACH BOAT RAMP", on 6 sheets, and dated "REV. AUG 2015".

Based on the information you have provided, we have determined that the proposed activity, which includes a discharge of dredged or fill material into waters, will have only minimal individual or cumulative environmental impacts on waters of the United States, including wetlands. Therefore, this work is authorized under the attached February 2015 General Permits for Massachusetts (GPs for MA), specifically GPs 3, 12, and 14, under the pre-construction notification process. This work must be performed in accordance with the terms and conditions of the GPs and also in compliance with the following special condition:

> Cofferdams will not be installed or removed between January 15 and May 31 of any year to protect the sensitive life stages of the winter flounder.

This authorization requires you to complete and return the enclosed Work Start

Notification Form(s) to this office at least two weeks before the anticipated starting date.

You are responsible for complying with all of the GP requirements. Please review the attached GPs for MA document carefully, in particular the general conditions beginning on Page 23, to familiarize yourself with its contents. You should ensure that whoever does the work fully understands the requirements and that a copy of the permit document and this authorization letter are at the project site throughout the time the work is underway.

The GPs for MA expire on February 4, 2020. Activities authorized under the GPs that have commenced (i.e., are under construction) or are under contract to commence before the GPs expire will have until February 4, 2021 to complete the activity under the terms and general conditions. For work within Corps jurisdiction that is not completed by February 4, 2021, you will need to reference any reissued or new GPs to see if your project is still authorized or if a new application is required. If it is no longer authorized you must submit an application and receive written authorization before you can continue work within our jurisdiction. Please contact us immediately if you change the plans or construction methods for work within our jurisdiction. This office must approve any changes before you undertake them.

This permit does not obviate the need to obtain other federal, state, or local authorizations required by law, as listed on Page 57 of the GP document. Performing work not specifically authorized by this determination or failing to comply with any special condition(s) provided above or all the terms and conditions of the GP may subject you to the enforcement provisions of our regulations.

This determination becomes valid only after the Massachusetts Department of Environmental Protection (MassDEP) issues or waives Water Quality Certification (WQC) as required under Section 401 of the Clean Water Act. In the event the MassDEP denies the 401 WQC, this determination becomes null and void. The address of the MassDEP Regional office for your area is provided on page 62 of the attached GP document.

Your project is located within, or may affect resources within the coastal zone. The Massachusetts Office of Coastal Zone Management (CZM) has already determined that no further Federal Consistency Review is required.

The Corps of Engineers has consulted with the National Marine Fisheries Service (NMFS) regarding the effects of your project on Essential Fish Habitat (EFH) as designated under the Magnuson-Stevens Fishery Conservation and Management Act. The National Marine Fisheries Service provided a conservation recommendation regarding the effects of your project on Essential Fish Habitat (EFH) as designated under the Magnuson-Stevens Fishery Conservation and Management Act. This has been incorporated into the special conditions.

We continually strive to improve our customer service. In order for us to better serve you, we would appreciate your completing our Customer Service Survey located at http://corpsmapu.usace.army.mil/cm_apex/f?p=regulatory_survey.

Please contact Phillip Nimeskern of my staff at (978) 318-8660, if you have any

questions.

Sincerely,

Charles N. Farris
Chief, Permits & Enforcement Branch
Regulatory Division

Attachments

cc:
David Smith, GZA Environmental, Inc., 372 Merrimac Street, Newburyport, Massachusetts, 01950, david.smith@gza.com

Ed Reiner, U.S. EPA, Region 1, Boston, Massachusetts, reiner.ed@epa.gov

Jim Mahala, Acting Chief, DEP SERO, Wetlands and Waterways, Lakeville, Massachusetts, jim.mahala@state.ma.us

Michael Girvan, MassDEP-WRP, Boston, Massachusetts, michael.girvan@state.ma.us

Robert Boeri, Coastal Zone Management, Boston, Massachusetts, Robert.Boeri@state.ma.us

Nantucket Conservation Commission, 2 Bathing Beach Road, Nantucket, Massachusetts, 20554

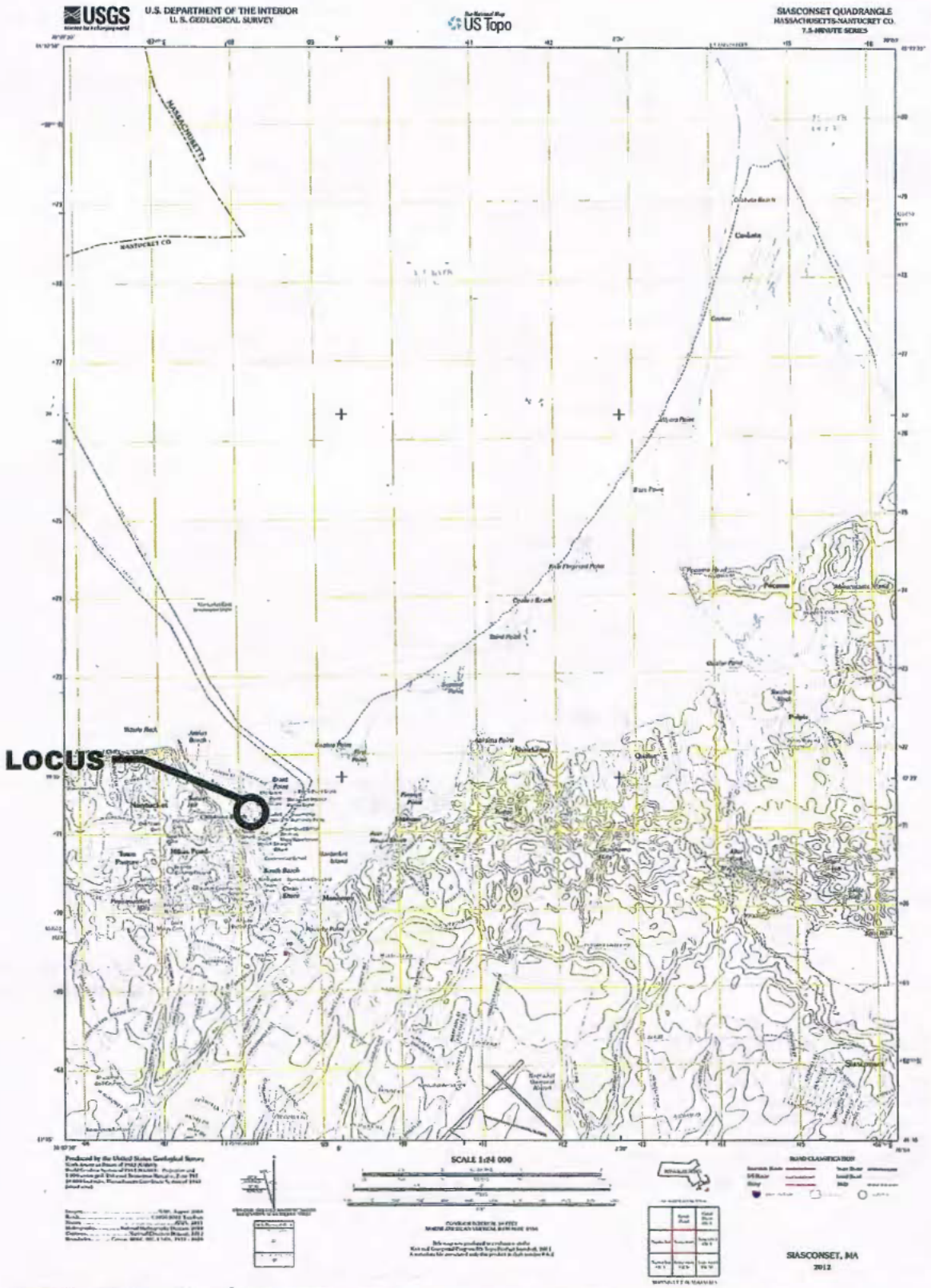

UNLESS SPECIFICALLY STATED BY WRITTEN AGREEMENT, THIS DRAWING IS THE SOLE PROPERTY OF GZA GEOENVIRONMENTAL, INC. (GZA). THE INFORMATION SHOWN ON THE DRAWING IS SOLELY FOR USE BY GZA'S CLIENT OR THE CLIENT'S DESIGNATED REPRESENTATIVE FOR THE SPECIFIC PROJECT AND LOCATION IDENTIFIED ON THE DRAWING. THE DRAWING SHALL NOT BE TRANSFERRED, REVISED, COPIED, OR ALTERED IN ANY MANNER FOR USE AT ANY OTHER LOCATION OR FOR ANY OTHER PURPOSE WITHOUT THE PRIOR WRITTEN CONSENT OF GZA. ANY TRANSFER, REUSE, OR MODIFICATION TO THE DRAWING BY THE CLIENT OR OTHERS, WITHOUT THE PRIOR WRITTEN EXPRESS CONSENT OF GZA, WILL BE AT THE USER'S SOLE RISK AND WITHOUT ANY RISK OR LIABILITY TO GZA

NO.	ISSUE/DESCRIPTION	BY	DATE

CHILDREN'S BEACH BOAT RAMP IMPROVEMENT PROJECT
15 HARBOR VIEW WAY
NANTUCKET, MA

PREPARED BY:
GZA GeoEnvironmental, Inc.
Engineers and Scientists
www.gza.com

PREPARED FOR:
TOWN OF NANTUCKET
4 FAIRGROUNDS ROAD
NANTUCKET, MA 02554

LOCUS PLAN

PROJ MGR: DAS	REVIEWED BY:	CHECKED BY:	FIGURE 1
DESIGNED BY: DAS	DRAWN BY: RKT	SCALE: N.T.S.	
DATE: MARCH 2015	PROJECT NO. 18.0172082.00	REVISION NO.	SHEET NO. 1 OF 2

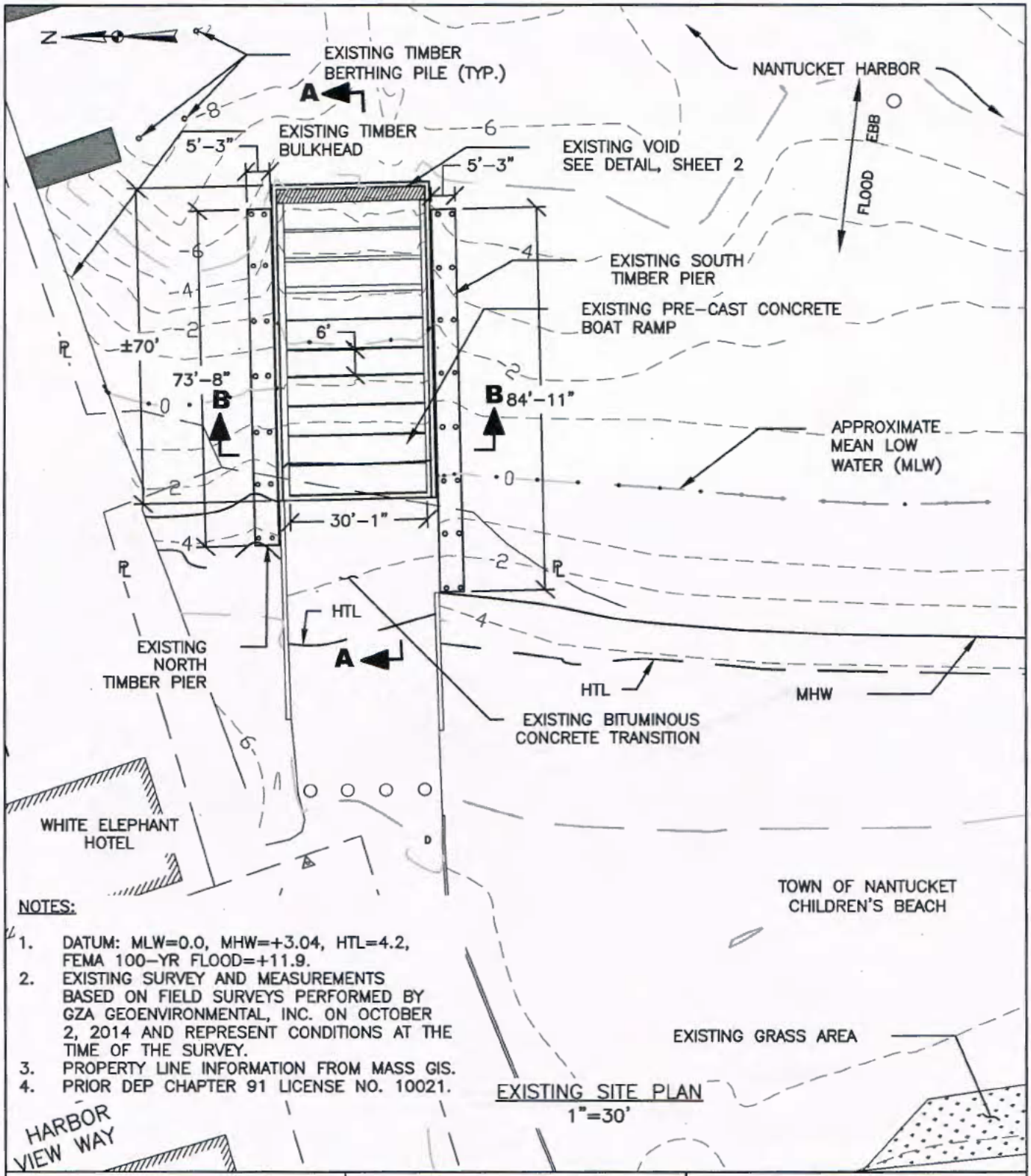

NOTES:

1. DATUM: MLW=0.0, MHW=+3.04, HTL=4.2, FEMA 100-YR FLOOD=+11.9.
2. EXISTING SURVEY AND MEASUREMENTS BASED ON FIELD SURVEYS PERFORMED BY GZA GEOENVIRONMENTAL, INC. ON OCTOBER 2, 2014 AND REPRESENT CONDITIONS AT THE TIME OF THE SURVEY.
3. PROPERTY LINE INFORMATION FROM MASS GIS.
4. PRIOR DEP CHAPTER 91 LICENSE NO. 10021.

EXISTING SITE PLAN
1"=30'

DATUM: MLW = 0.0 NAVD88=1.89 MHW=3.04 HTL=4.2 0' 15' 30'	CHILDREN'S BEACH BOAT RAMP EXISTING SITE PLAN	AT: 15 HARBOR VIEW WAY NANTUCKET HARBOR COUNTY: NANTUCKET COUNTY APPLICATION BY: TOWN OF NANTUCKET 4 FAIRGROUNDS ROAD NANTUCKET, MA 02554 REV. AUG 2015 SHEET 1 OF 6

GZA GEOENVIRONMENTAL, INC.

NOTES:

1. PRIOR DEP CHAPTER 91 LICENSE NO. 10021

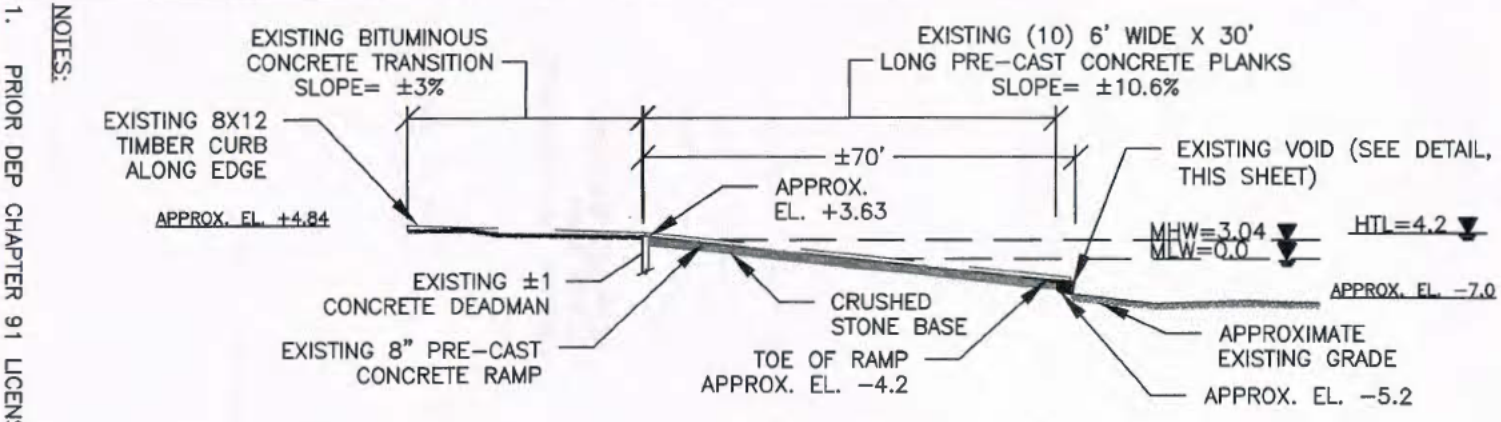

EXISTING SECTION A-A
SCALE: 1"=30'

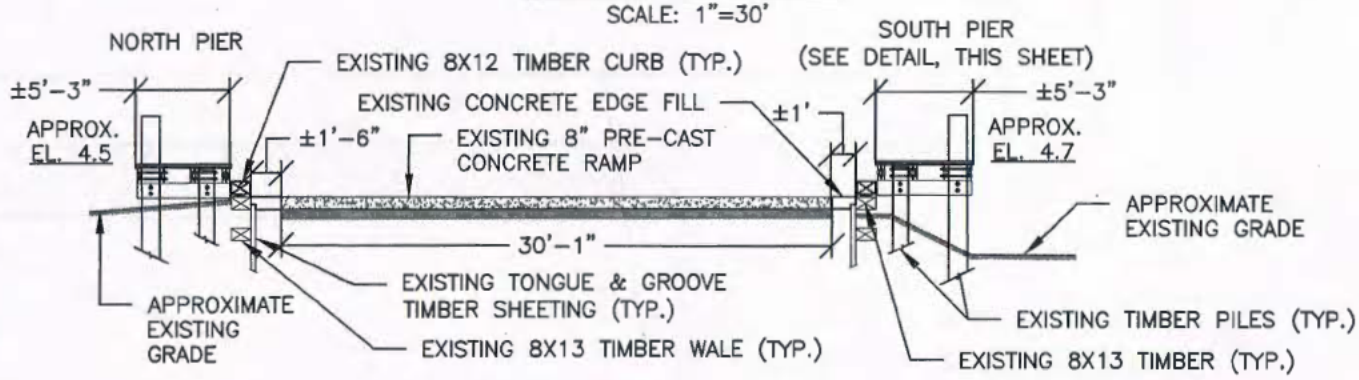

EXISTING SECTION B-B
SCALE: 1"=10'

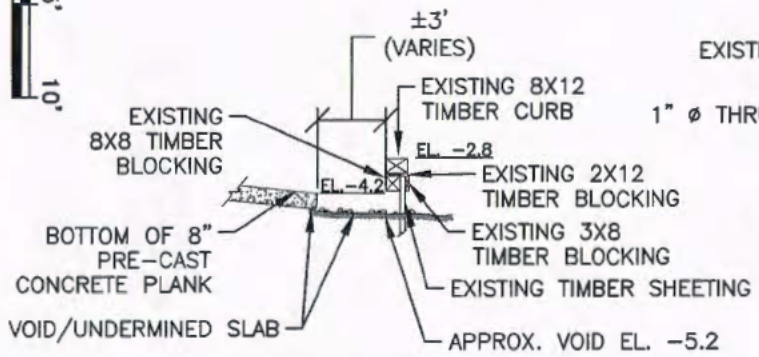

EXISTING DETAIL
SCALE: 1"=8'

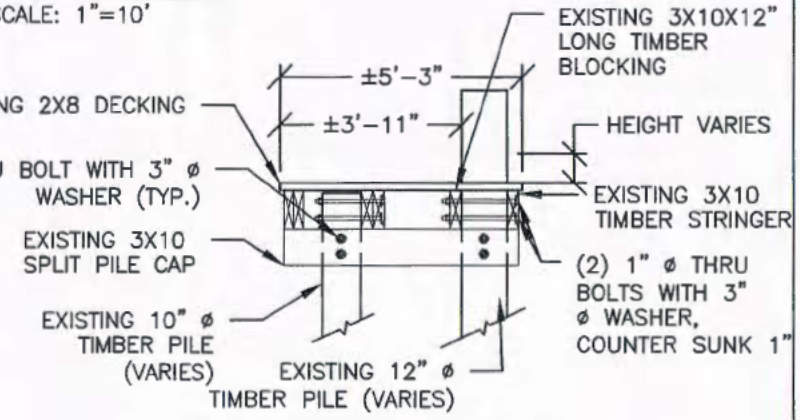

EXISTING TIMBER PIER DETAIL
SCALE: 1"=4'

DATUM: MLW = 0.0
NAVD88=1.89
MHW=3.04
HTL=4.2

0' 15' 30'

0' 4' 8'

0' 2' 4'

0' 5' 10'

CHILDREN'S BEACH BOAT RAMP

EXISTING SECTIONS AND DETAILS

AT: 15 HARBOR VIEW WAY
NANTUCKET HARBOR
COUNTY: NANTUCKET COUNTY
APPLICATION BY:
TOWN OF NANTUCKET
4 FAIRGROUNDS ROAD
NANTUCKET, MA 02554

REV. AUG 2015

SHEET 2 OF 6

GZA GEOENVIRONMENTAL, INC.

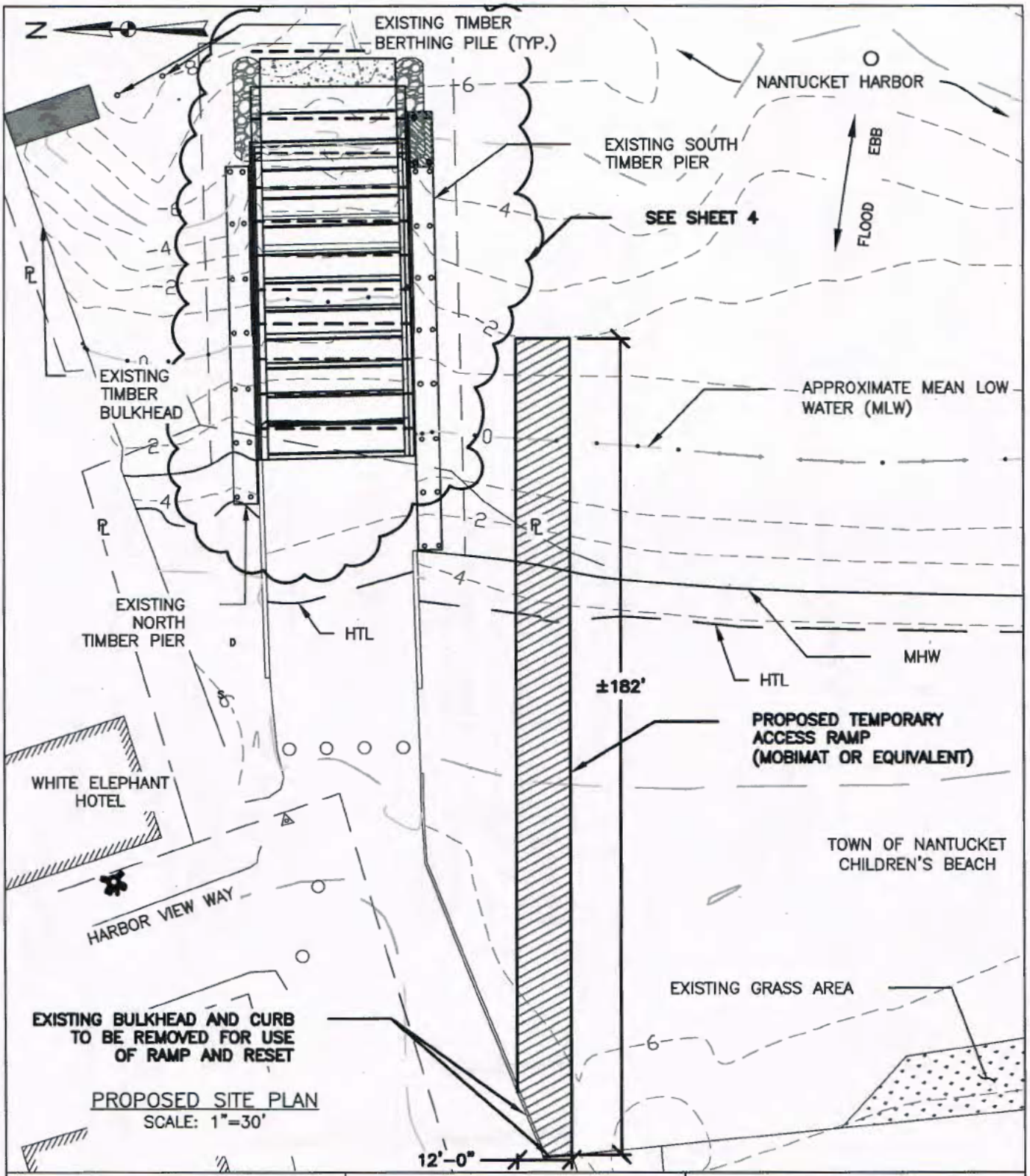

DATUM: MLW = 0.0
NAVD88=1.89
MHW=3.04
HTL=4.2

0' 15' 30'

CHILDREN'S BEACH BOAT RAMP

PROPOSED SITE PLAN

AT: 15 HARBOR VIEW WAY
NANTUCKET HARBOR
COUNTY: NANTUCKET COUNTY
APPLICATION BY:
TOWN OF NANTUCKET
4 FAIRGROUNDS ROAD
NANTUCKET, MA 02554

REV. AUG 2015 SHEET 3 OF 6

GZA GEOENVIRONMENTAL, INC.

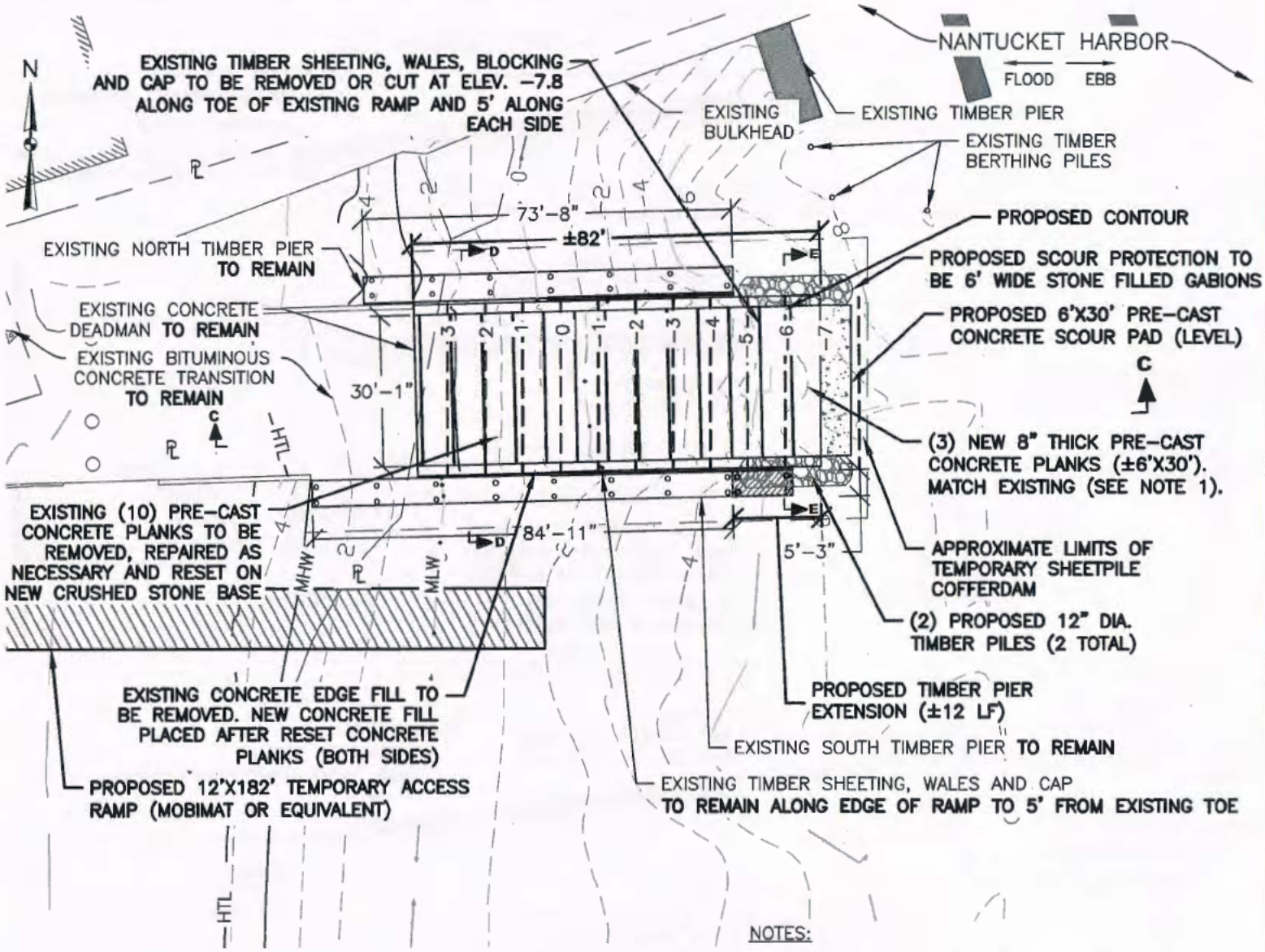

PROPOSED SITE PLAN
SCALE: 1"=30'

NOTES:

1. EXISTING CONCRETE PLANKS TO BE REMOVED, REPAIRED AS NECESSARY, STOCK PILED AND RESET TO LINES AND GRADES SHOWN ON DRAWINGS. NEW RAMP LAYOUT TO INCLUDE EXISTING SALVAGED PLANS AND (3) 6'X30' SUPPLEMENTAL PLANKS.

DATUM: MLW = 0.0
NAVD88=1.89
MHW=3.04
HTL=4.2

0' 15' 30'

CHILDREN'S BEACH BOAT RAMP
PROPOSED SITE PLAN

AT: 15 HARBOR VIEW WAY
NANTUCKET HARBOR
COUNTY: NANTUCKET COUNTY
APPLICATION BY:
TOWN OF NANTUCKET
4 FAIRGROUNDS ROAD
NANTUCKET, MA 02554

REV. AUG 2015 SHEET 4 OF 6

GZA GEOENVIRONMENTAL, INC.

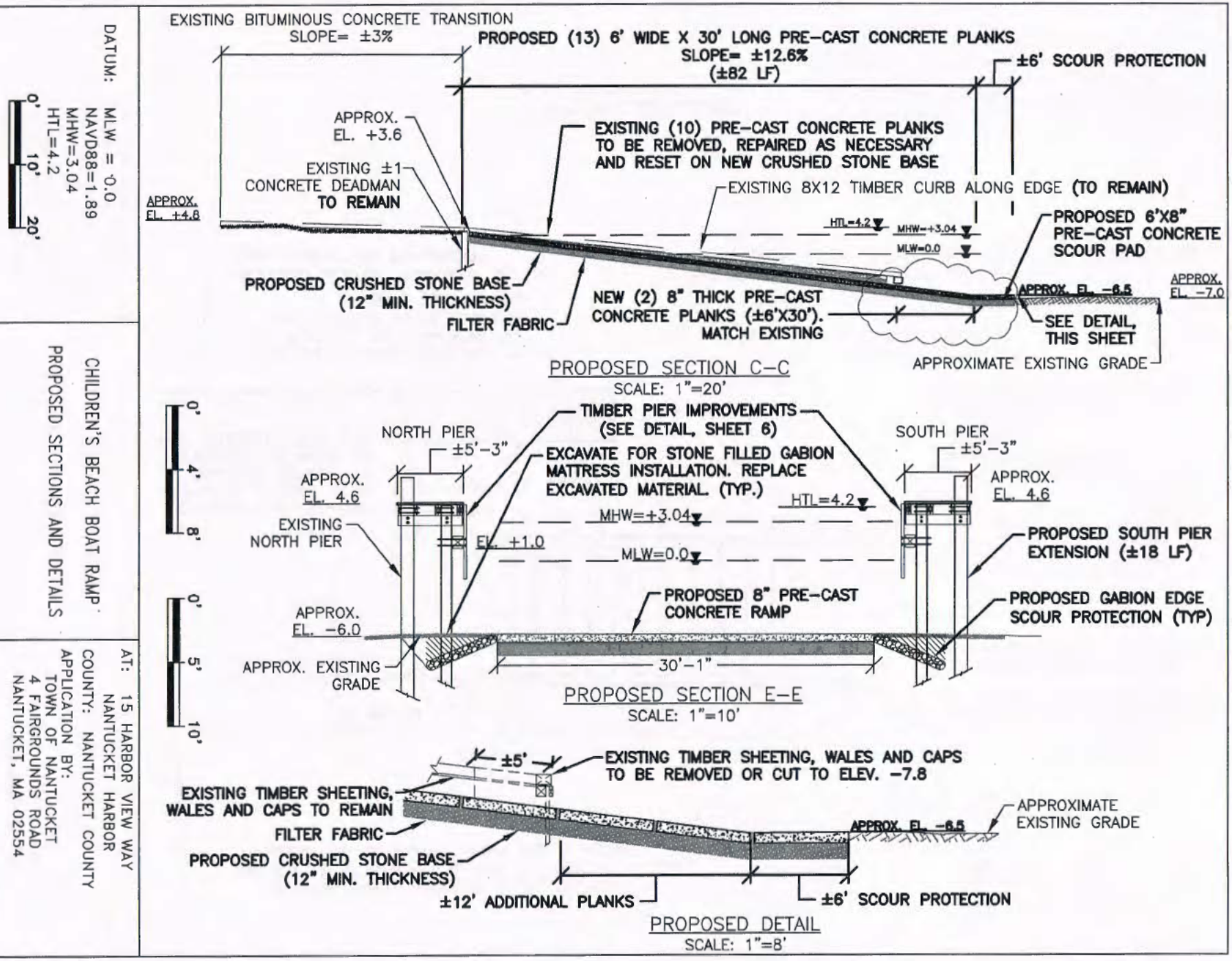

DATUM: MLW = 0.0
NAVD88=1.89
MHW=3.04
HTL=4.2

CHILDREN'S BEACH BOAT RAMP

PROPOSED SECTIONS AND DETAILS

AT: 15 HARBOR VIEW WAY
NANTUCKET HARBOR
COUNTY: NANTUCKET COUNTY

APPLICATION BY:
TOWN OF NANTUCKET
4 FAIRGROUNDS ROAD
NANTUCKET, MA 02554

REV. AUG 2015

SHEET 5 OF 6

GZA GEOENVIRONMENTAL, INC.

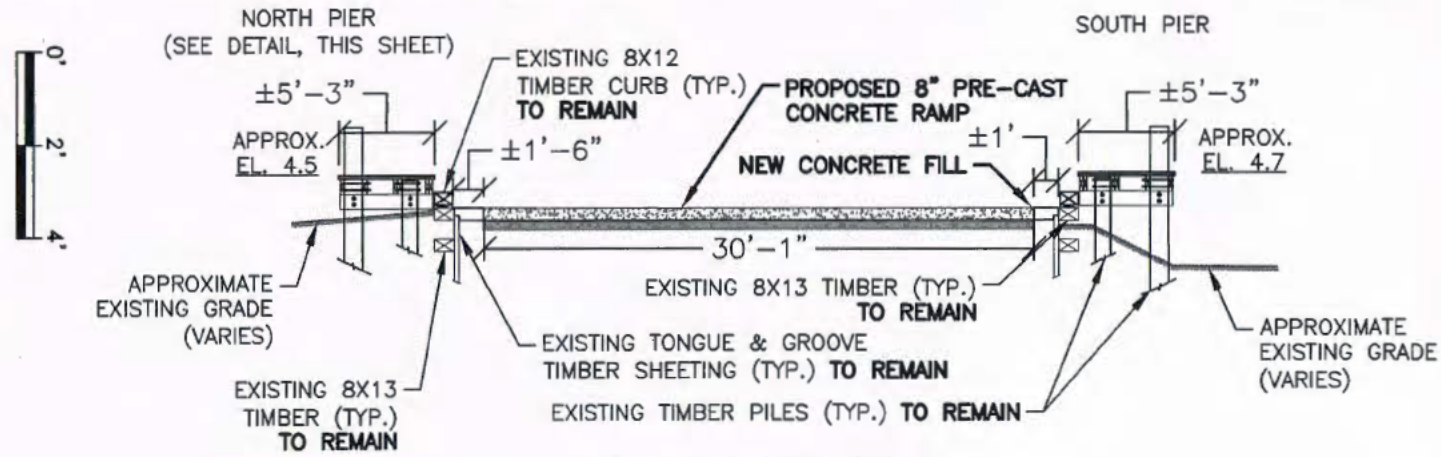

PROPOSED SECTION D–D
SCALE: 1"=10'

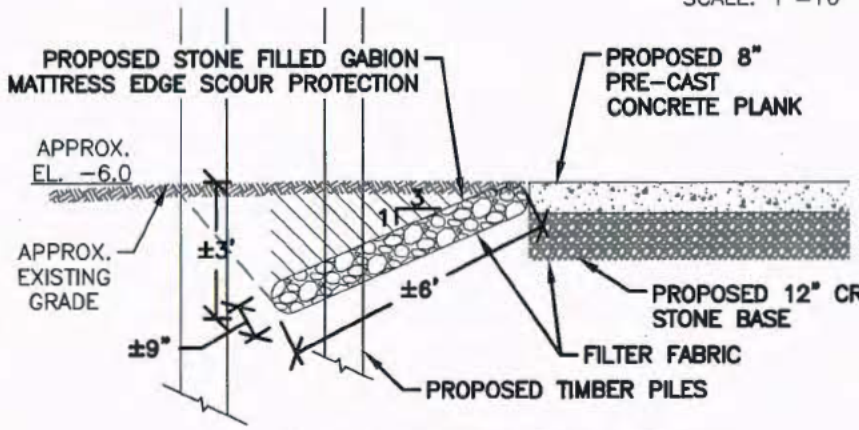

PROPOSED EDGE SCOUR DETAIL
SCALE: 1"=4'

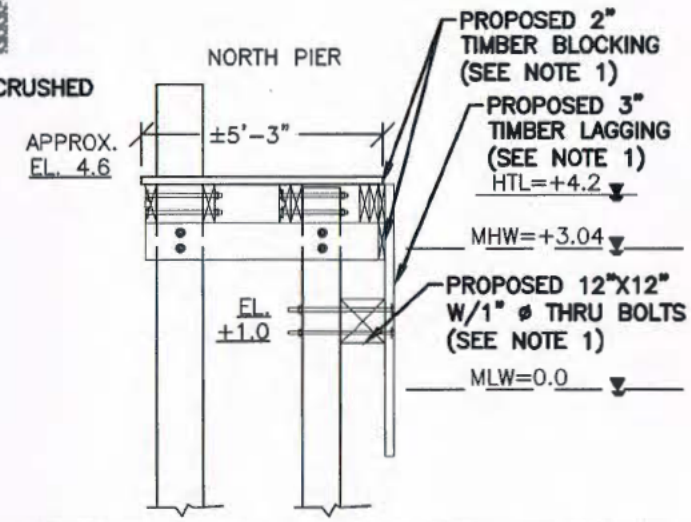

PROPOSED TIMBER IMPROVEMENT PIER DETAIL
SCALE: 1"=4'

NOTES:

1. TIMBER PIER IMPROVEMENTS INCLUDE INSTALLATION OF TIMBER WALE, LAGGING AND BLOCKING TO EXISTING TIMBER PIERS (±36 LF) AND SOUTH PIER EXTENSION (±12 LF).

DATUM: MLW = 0.0
NAVD88=1.89
MHW=3.0
HTL=4.2

0' 5' 10'

CHILDREN'S BEACH BOAT RAMP
PROPOSED SECTIONS AND DETAILS

AT: 15 HARBOR VIEW WAY
NANTUCKET HARBOR
COUNTY: NANTUCKET COUNTY
APPLICATION BY:
TOWN OF NANTUCKET
4 FAIRGROUNDS ROAD
NANTUCKET, MA 02554

REV. AUG 2015 SHEET 6 OF 6

GZA GEOENVIRONMENTAL, INC.

US Army Corps of Engineers®
New England District

WORK-START NOTIFICATION FORM

(Minimum Notice: Two weeks before work begins)

****

*	EMAIL TO:	cenae-r@usace.army.mil; or *
*		*
*	MAIL TO:	Phillip Nimeskern *
*		U.S. Army Corps of Engineers, New England District *
*		Permits and Enforcement Branch *
*		Regulatory Division *
*		696 Virginia Road *
*		Concord, Massachusetts 01742-2751 *

****

Corps of Engineers Permit No. NAE-2015-00623 was issued to Town of Nantucket, Massachusetts on 30 June 2016. This work is located in Nantucket Harbor at 15 Harbor View Way, Nantucket, Massachusetts. The permit authorized the permittee to retain, construct, and maintain a boat ramp in on Children's Beach.

The people (e.g., contractor) listed below will do the work, and they understand the permit's conditions and limitations.

PLEASE PRINT OR TYPE

Name of Person/Firm: _____

Business Address: _____

_____

_____

_____

Telephone Numbers: ( ) _____ ( ) _____

Proposed Work Dates: **Start:** _____ **Finish:** _____

Permittee/Agent Signature: _____ **Date:** _____

Printed Name: _____ **Title:** _____

Date Permit Issued: 30 June 2016 **Date Permit Expires:** February 4, 2020

****

FOR USE BY THE CORPS OF ENGINEERS

PM: _____ **Submittals Required:** _____

Inspection Recommendation: _____

_____

_____

"ATTACHMENT C"
[Subsurface Investigations – For Reference Only]

GZA
GeoEnvironmental, Inc.

Engineers and Scientists

January 28, 2004
File No. 32771

Mr. Stan Humphries
Ocean and Coastal Consultants, Inc.
Mill Building No. 3
36 Cordage Park Circle
Plymouth, MA 02360

140 Broadway
Providence
Rhode Island 02903
401-421-4140
FAX 401-751-8613
http://www.gza.net

Re: Boring Logs
Nantucket Yacht Club – Bulkhead Repair
Nantucket, Massachusetts

Dear Mr. Humphries:

Please find attached the boring logs for six borings, designated GZ-1 through GZ-6, completed at the Nantucket Yacht Club on January 21 and 22, 2004. The borings were drilled by GZA Drilling, Inc. of Brockton, Massachusetts and advanced to a depth of 32 feet below existing grade using hollow stemmed augers and a truck mounted drill rig. Split spoon soil samples were generally obtained at five-foot intervals in conformance with ASTM D-1586, the Standard Penetration Test (SPT). The SPT consists of drilling a 1-3/8 inch inside diameter standard split spoon sampler at least 18 inches with a 140-pound hammer dropping from a height of 30 inches. The SPT N-value is the number of blows required to drive the sampler from 6 to 18 inches of penetration.

The borings were drilled at the locations pre-marked by your office. The attached field sketch shows the approximate boring locations.

Please let us know if you have any questions or require additional information. We would be happy to assist you further with this project.

Sincerely,

GZA GEOENVIRONMENTAL, INC.

Stephanie Banks
Geotechnical Engineer

David R. Carchedi, Ph.D., P.E.
Senior Principal

SJB:bla

Enclosures: Exploration Location Sketch
Boring Logs

J:\Geo\32771.drc\32771Let01.doc

Copyright © 2004 GZA GeoEnvironmental, Inc.

An Equal Opportunity Employer M/F/V/H

GZA GEOENVIRONMENTAL INC. 140 BROADWAY, PROVIDENCE, RHODE ISLAND GEOTECH/GEOHYDROLOGICAL CONSULTANTS GEOTECHNICAL BORING LOG	PROJECT Nantucket Yacht Club Nantucket, Massachusetts	REPORT OF BORING NO. GZ-1 SHEET 1 of 1 F&E NO. 3277E CHKD BY SJB

BORING CO. GZA Drilling, Inc.
FOREMAN Chris Lenling and Norman Stuttard
GZA ENG. Joanne Kissinger

BORING LOCATION See Exploration Location Sketch
GROUND SURFACE ELEV. Unknown DATUM
DATE START 1/22/04 DATE END 1/22/04

SAMPLER: UNLESS OTHERWISE NOTED, SAMPLER CONSISTS OF A 2" SPLIT SPOON DRIVEN USING A 140 lb. HAMMER FALLING 30 IN

CASING: UNLESS OTHERWISE NOTED, CASING DRIVEN USING A 300 lb HAMMER FALLING 24 IN.

CASING SIZE: - OTHER: 3-3/4" HSA

GROUNDWATER READINGS

DATE	TIME	WATER	CASING	STABILIZATION TIME

DEPTH	CASING BLOWS	SAMPLE NO	PEN./REC	DEPTH (FT)	BLOWS/6"	SAMPLE DESCRIPTION BURMISTER CLASSIFICATION	R K	STRATUM DESCRIPTION
		S-1	24/15	0-2	30-19	Medium dense, tan, fine to medium SAND, trace Silt (dry)		
					10-7			
5		S-2	24/18	5-7	3-4	Medium dense, tan, fine to medium SAND, trace Silt (wet)		
					8-7			
10		S-3	24/15	10-12	7-9	Medium dense, tan, fine to medium SAND, trace Silt (wet)		FINE TO MEDIUM SAND (occasional Silty Sand interval)
					9-11			
15		S-4	24/22	15-17	5-8	(Top 16"): Medium dense, tan, fine to medium SAND, trace Silt (wet)		
					20-17	(Bottom 6"): Gray, fine to medium SAND, some Silt (wet)		
20		S-5	24/20	20-22	6-14	(Top 16"): Very dense, tan, fine to medium SAND, trace Silt (wet)		
					42-34	(Bottom 4"): Orange-tan, fine to medium SAND, trace Silt (wet)		
25		S-6	24/22	25-27	7-10	Medium dense, tan, fine to medium SAND, trace Silt (wet)		
					11-13			
30		S-7	24/15	30-32	7-10	Dense, tan/orange (mottled), fine to medium SAND, trace Silt (wet)		
					26-29			
						End of Exploration at ±32'		

GRANULAR SOILS BLOWS/FT	DENSITY	COHESIVE SOILS BLOWS/FT	DENSITY
0-4	VERY LOOSE	<2	VERY SOFT
4-10	LOOSE	2-4	SOFT
10-30	MEDIUM DENSE	4-8	M. STIFF
30-50	DENSE	8-15	STIFF
>50	VERY DENSE	15-30	V. STIFF
		>30	HARD

REMARKS:

NOTES: 1) STRATIFICATION LINES REPRESENT APPROXIMATE BOUNDARY BETWEEN SOIL TYPES. TRANSITIONS MAY BE GRADUAL.
2) WATER LEVEL READINGS HAVE BEEN MADE AT TIMES AND UNDER CONDITIONS STATED. FLUCTUATIONS OF GROUNDWATER MAY OCCUR DUE TO OTHER FACTORS THAN THOSE PRESENT AT THE TIME MEASUREMENTS WERE MADE

GZA GEOENVIRONMENTAL, INC.	PROJECT	REPORT OF BORING NO.	GZ-2
140 BROADWAY, PROVIDENCE, RHODE ISLAND	Nantucket Yacht Club	SHEET	1 of 1
GEOTECH/GEOHYDROLOGICAL CONSULTANTS	Nantucket, Massachusetts	FILE NO.	32771
GEOTECHNICAL BORING LOG		CHKD BY	SJB

BORING CO.	GZA Drilling, Inc.	BORING LOCATION	See Exploration Location Sketch
FOREMAN	Chris Lenling and Norman Stuttard	GROUND SURFACE ELEV.	Unknown
GZA ENG.	Joanne Kissinger	DATUM	-
		DATE START	1/22/04
		DATE END	1/22/04

SAMPLER: UNLESS OTHERWISE NOTED, SAMPLER CONSISTS OF A 2" SPLIT SPOON DRIVEN USING A 140 lb. HAMMER FALLING 30 IN

CASING: UNLESS OTHERWISE NOTED, CASING DRIVEN USING A 300 lb HAMMER FALLING 24 IN.

CASING SIZE: - OTHER: 3-3/4" HSA

GROUNDWATER READINGS

DATE	TIME	WATER	CASING	STABILIZATION TIME

DEPTH	CASING BLOWS	SAMPLE NO	PEN/REC	DEPTH (FT)	BLOWS/6"	SAMPLE DESCRIPTION BURMISTER CLASSIFICATION	RK	STRATUM DESCRIPTION
		S-1	24/12	0-2	21-14	Medium dense, tan, fine to medium SAND, trace Silt (dry)		
					11-9			
5							1	
		S-2	24/19	5-7	5-7	(Top 10"): Medium dense, tan (with black areas), fine to medium		
					9-10	SAND, trace Silt (wet)		FINE TO MEDIUM
						(Bottom 9"): Gray (with black areas), fine to medium SAND, some Silt		SAND
								(occasional Silty Sand interval)
10								
		S-3	24/22	10-12	2-4	Loose, tan, fine to coarse (-) SAND, trace Silt (wet)		
					4-4			
15								
		S-4	24/17	15-17	9-11	Medium dense, gray, fine to medium SAND, trace Silt (wet)		
					13-16			
								±19'
20								
		S-5	24/10	20-22	3-7	Medium dense, tan, fine to coarse (-) SAND, trace Silt (wet)		
					11-12			FINE TO COARSE
								SAND
25								
		S-6	24/22	25-27	4-9	(Top 14"): Medium dense, tan, fine to coarse (-) SAND, trace Silt (wet)		±26'
					16-21	(Bottom 8"): Tan, fine to medium SAND, trace Silt (wet)		
								FINE TO MEDIUM
								SAND
30								
		S-7	24/20	30-32	11-13	(Top 16"): Medium dense, tan, fine to medium SAND, trace		±31.5'
					13-23	Silt (wet)		FINE SAND AND SILT
						(Bottom 4"): Tan, fine SAND and Silt		
						End of Exploration at ±32'		

GRANULAR SOILS BLOWS/FT	DENSITY	COHESIVE SOILS BLOWS/FT	DENSITY
0-4	VERY LOOSE	<2	VERY SOFT
4-10	LOOSE	2-4	SOFT
10-30	MEDIUM DENSE	4-8	M. STIFF
30-50	DENSE	8-15	STIFF
>50	VERY DENSE	15-30	V. STIFF
		>30	HARD

REMARKS:

1. Petroleum like odor observed in sample S-3.

NOTES:

1) STRATIFICATION LINES REPRESENT APPROXIMATE BOUNDARY BETWEEN SOIL TYPES, TRANSITIONS MAY BE GRADUAL.

2) WATER LEVEL READINGS HAVE BEEN MADE AT TIMES AND UNDER CONDITIONS STATED. FLUCTUATIONS OF GROUNDWATER MAY OCCUR DUE TO OTHER FACTORS THAN THOSE PRESENT AT THE TIME MEASUREMENTS WERE MADE

GZA GEOENVIRONMENTAL INC. 140 BROADWAY, PROVIDENCE, RHODE ISLAND GEOTECH/GEOHYDROLOGICAL CONSULTANTS GEOTECHNICAL BORING LOG	PROJECT Nantucket Yacht Club Nantucket, Massachusetts	REPORT OF BORING NO. GZ-9 SHEET 1 of 1 FILE NO. 32776 CHKD BY SJB

BORING CO.	GZA Drilling, Inc.	BORING LOCATION	See Exploration Location Sketch
FOREMAN	Chris Lenfing and Norman Stuttard	GROUND SURFACE ELEV.	Unknown
GZA ENG.	Joanna Kissinger	DATUM	-
		DATE START	1/22/04
		DATE END	1/22/04

SAMPLER: UNLESS OTHERWISE NOTED, SAMPLER CONSISTS OF A 2" SPLIT SPOON DRIVEN USING A 140 lb. HAMMER FALLING 30 IN

CASING: UNLESS OTHERWISE NOTED, CASING DRIVEN USING A 300 lb HAMMER FALLING 24 IN.

CASING SIZE: - OTHER: 3-3/4" HSA

GROUNDWATER READINGS

DATE	TIME	WATER	CASING	STABILIZATION TIME

DEPTH	CASING BLOWS	SAMPLE NO	PEN./REC	DEPTH (FT)	BLOWS/6"	SAMPLE DESCRIPTION BURMISTER CLASSIFICATION	R K	STRATUM DESCRIPTION
								±2" ASPHALT
		S-1	24/10	0.2-2.2	6-4	Loose to medium dense, brown, fine to medium SAND, little Silt (dry)		
					6-5			
5		S-2	24/18	5-7	4-6	Medium dense, tan, fine to coarse (-) SAND, trace Silt (wet)		
					9-9			
								FINE TO COARSE SAND
10		S-3	24/20	10-12	9-11	Medium dense, tan, fine to coarse (-) SAND, trace Silt (wet)		
					14-21			
15		S-4	24/21	15-17	7-11	Medium dense, orange and tan, fine to coarse (-) SAND, trace Silt (wet)		
					13-19			
20		S-5	24/18	20-22	5-9	Medium dense, tan, fine to coarse (-) SAND, trace Silt (wet)		
					10-14			
								±24'
25		S-6	24/21	25-27	19-21	Dense, tan, fine to medium SAND, trace Silt (wet)		
					26-31			FINE TO MEDIUM SAND
30		S-7	24/18	30-32	10-11	Medium dense, orange-tan, fine to medium SAND, trace Silt (wet)		
					15-17			
						End of Exploration at ±32'		

GRANULAR SOILS BLOWS/FT	DENSITY	COHESIVE SOILS BLOWS/FT	DENSITY
0-4	VERY LOOSE	<2	VERY SOFT
4-10	LOOSE	2-4	SOFT
10-30	MEDIUM DENSE	4-8	M. STIFF
30-50	DENSE	8-15	STIFF
>50	VERY DENSE	15-30	V. STIFF
		>30	HARD

REMARKS:

NOTES: 1) STRATIFICATION LINES REPRESENT APPROXIMATE BOUNDARY BETWEEN SOIL TYPES, TRANSITIONS MAY BE GRADUAL.
2) WATER LEVEL READINGS HAVE BEEN MADE AT TIMES AND UNDER CONDITIONS STATED, FLUCTUATIONS OF GROUNDWATER MAY OCCUR DUE TO OTHER FACTORS THAN THOSE PRESENT AT THE TIME MEASUREMENTS WERE MADE

GZA GEOENVIRONMENTAL INC.	PROJECT	REPORT OF BORING NO.	GZ-4
140 BROADWAY, PROVIDENCE, RHODE ISLAND	Nantucket Yacht Club	SHEET	1 of 1
GEOTECH/GEOHYDROLOGICAL CONSULTANTS	Nantucket, Massachusetts	FILE NO.	32771
GEOTECHNICAL BORING LOG		CHKD BY	SJB

BORING CO.	GZA Drilling, Inc.	BORING LOCATION	See Exploration Location Sketch
FOREMAN	Chris Lenfing and Norman Stuttard	GROUND SURFACE ELEV.	Unknown
GZA ENG.	Joanne Kissinger	DATUM	-
		DATE START	1/22/04
		DATE END	1/22/04

SAMPLER: UNLESS OTHERWISE NOTED, SAMPLER CONSISTS OF A 2" SPLIT SPOON DRIVEN USING A 140 lb. HAMMER FALLING 30 IN

CASING: UNLESS OTHERWISE NOTED, CASING DRIVEN USING A 300 lb HAMMER FALLING 24 IN.

CASING SIZE: OTHER: 3-3/4" HSA

GROUNDWATER READINGS

DATE	TIME	WATER	CASING	STABILIZATION TIME

DEPTH	CASING BLOWS	SAMPLE NO	PEN./REC.	DEPTH (FT)	BLOWS/6"	SAMPLE DESCRIPTION BURMISTER CLASSIFICATION	R K	STRATUM DESCRIPTION
		S-1	24/12	0-2	21-12	Medium dense, tan, fine to medium SAND, trace Silt (dry)		
					5-6			
5		S-2	24/21	5-7	5-5	(Top 11"): Loose to medium dense, orange-tan, fine to medium SAND,		
					6-6	trace Silt (wet)		
						(Bottom 10"): Tan, fine to medium SAND, trace Silt (wet)		
10		S-3	24/19	10-12	6-8	Medium dense, gray, fine to medium SAND, trace Silt (wet)		
					21-25			
								FINE TO MEDIUM SAND (occasional Silty fine Sand interval)
15		S-4	24/22	15-17	6-7	(Top 16"): Medium dense, gray, fine to medium SAND, trace Silt (wet)		
					7-9	(Bottom 6"): Gray, fine SAND and Silt (wet)		
20		S-5	24/24	20-22	12-14	(Top 15"): Medium dense, gray, fine to medium SAND, trace Silt (wet)		
					19-28	(Middle 5"): Gray, fine SAND and Silt (wet)		
						(Bottom 4"): Orange, fine to medium SAND, trace Silt (wet)		
25		S-6	24/24	25-27	5-6	Medium dense, orange and tan, fine to medium SAND, trace Silt (wet)		
					18-35			
30		S-7	24/18	30-32	7-9	Medium dense, orange and tan, fine to medium SAND, trace Silt (wet)		
					11-14			
						End of Exploration at ±32'		

GRANULAR SOILS BLOWS/FT	DENSITY	COHESIVE SOILS BLOWS/FT	DENSITY
0-4	VERY LOOSE	<2	VERY SOFT
4-10	LOOSE	2-4	SOFT
10-30	MEDIUM DENSE	4-8	M. STIFF
30-50	DENSE	8-15	STIFF
>50	VERY DENSE	15-30	V. STIFF
		>30	HARD

REMARKS:

NOTES: 1) STRATIFICATION LINES REPRESENT APPROXIMATE BOUNDARY BETWEEN SOIL TYPES, TRANSITIONS MAY BE GRADUAL.
2) WATER LEVEL READINGS HAVE BEEN MADE AT TIMES AND UNDER CONDITIONS STATED, FLUCTUATIONS OF GROUNDWATER MAY OCCUR DUE TO OTHER FACTORS THAN THOSE PRESENT AT THE TIME MEASUREMENTS WERE MADE

GZA GEOENVIRONMENTAL INC. 140 BROADWAY, PROVIDENCE, RHODE ISLAND GEOTECH/GEOHYDROLOGICAL CONSULTANTS GEOTECHNICAL BORING LOG	PROJECT: Nantucket Yacht Club, Nantucket, Massachusetts	REPORT OF BORING NO. GZ-5; SHEET 1 of 1; FILE NO. 32771; CHKD BY SJB

BORING CO. GZA Drilling, Inc.
FOREMAN Chris Lenling and Norman Stuttard
GZA ENG. Joanne Kissinger

BORING LOCATION See Exploration Location Sketch
GROUND SURFACE ELEV. Unknown DATUM -
DATE START 1/22/04 DATE END 1/22/04

SAMPLER: UNLESS OTHERWISE NOTED, SAMPLER CONSISTS OF A 2" SPLIT SPOON DRIVEN USING A 140 lb. HAMMER FALLING 30 IN

CASING: UNLESS OTHERWISE NOTED, CASING DRIVEN USING A 300 lb HAMMER FALLING 24 IN.

CASING SIZE - OTHER: 3-3/4" HSA

GROUNDWATER READINGS

DATE	TIME	WATER	CASING	STABILIZATION TIME

DEPTH	CASING BLOWS	SAMPLE NO	PEN./REC	DEPTH (FT)	BLOWS/6"	SAMPLE DESCRIPTION BURMISTER CLASSIFICATION	RK	STRATUM DESCRIPTION
		S-1	24/15	0-2	103-75	(Top 6"): Very dense, brown, fine to medium SAND, some Silt	1	
					32-15	(Bottom 9"): Tan, fine to medium SAND, trace Silt (dry)	2	
5		S-2	24/12	5-7	3-2	Very loose to loose, tan, fine to medium SAND, trace Silt (wet)		FINE TO MEDIUM SAND (occasional Silty fine Sand and fine to coarse Sand intervals)
					2-3			
10		S-3	24/15	10-12	6-9	Medium dense, gray, fine to medium SAND, trace Silt (wet)		
					8-13			
15		S-4	24/22	15-17	3-7	(Top 16"): Medium dense, gray, fine to medium SAND, trace Silt (wet)		
					8-11	(Bottom 6"): Gray, fine SAND and Silt (wet)		
20		S-5	24/12	20-22	5-11	Medium dense, orange and tan, fine to coarse SAND, trace Silt (wet)		
					15-26			
25		S-6	24/24	25-27	9-11	Medium dense, tan, fine to medium SAND, trace Silt (wet)		
					14-21			
30		S-7	24/18	30-32	21-29	Very dense, orange and tan, fine to coarse SAND, trace Silt (wet)		
					34-36			
						End of Exploration at ±32'		

GRANULAR SOILS BLOWS/FT	DENSITY	COHESIVE SOILS BLOWS/FT	DENSITY
0-4	VERY LOOSE	<2	VERY SOFT
4-10	LOOSE	2-4	SOFT
10-30	MEDIUM DENSE	4-8	M. STIFF
30-50	DENSE	8-15	STIFF
>50	VERY DENSE	15-30	V. STIFF
		>30	HARD

REMARKS:
1. Frost encountered at ground surface.
2. 1" PVC sprinkler line and copper wire hit at ±5" depth, encountered during augering.

NOTES: 1) STRATIFICATION LINES REPRESENT APPROXIMATE BOUNDARY BETWEEN SOIL TYPES, TRANSITIONS MAY BE GRADUAL.
2) WATER LEVEL READINGS HAVE BEEN MADE AT TIMES AND UNDER CONDITIONS STATED, FLUCTUATIONS OF GROUNDWATER MAY OCCUR DUE TO OTHER FACTORS THAN THOSE PRESENT AT THE TIME MEASUREMENTS WERE MADE

GZA GEOENVIRONMENTAL, INC.	PROJECT	REPORT OF BORING NO. GZ-6
140 BROADWAY, PROVIDENCE, RHODE ISLAND	Nantucket Yacht Club	SHEET 1 of 1
GEOTECH/GEOHYDROLOGICAL CONSULTANTS	Nantucket, Massachusetts	FILE NO. 32771
GEOTECHNICAL BORING LOG		CHKD BY SJB

BORING CO.	GZA Drilling, Inc.	BORING LOCATION	See Exploration Location Sketch
FOREMAN	Chris Lenling and Norman Stuttard	GROUND SURFACE ELEV. Unknown	DATUM -
GZA ENG.	Joanne Kissinger	DATE START 1/21/04	DATE END 1/21/04

SAMPLER: UNLESS OTHERWISE NOTED, SAMPLER CONSISTS OF A 2" SPLIT SPOON DRIVEN USING A 140 lb. HAMMER FALLING 30 IN

CASING: UNLESS OTHERWISE NOTED, CASING DRIVEN USING A 300 lb HAMMER FALLING 24 IN.

CASING SIZE: - OTHER: 3-3/4" HSA

GROUNDWATER READINGS

DATE	TIME	WATER	CASING	STABILIZATION TIME

DEPTH	CASING BLOWS	SAMPLE NO	PEN./REC	DEPTH (FT)	BLOWS/6"	SAMPLE DESCRIPTION BURMISTER CLASSIFICATION	R K	STRATUM DESCRIPTION
		S-1	24/8	0-2	12-6	Medium dense, brown, fine to medium SAND, little Silt (dry)		±2" TOPSOIL
					5-5			
5		S-2	24/2	5-7	4-3	Loose, tan, fine to medium SAND, trace Silt (wet)		
					2-2			FINE TO MEDIUM SAND (occasional Silty fine Sand interval)
10		S-3	24/21	10-12	9-11	Medium dense, tan, fine to medium SAND, trace Silt (wet)		
					14-19			
15		S-4	24/16	15-17	8-9	(Top 3"): Medium dense, gray, fine to medium SAND, trace Silt (wet)		
					13-14	(Bottom 12"): Gray, fine SAND and Silt (wet)		
20		S-5	24/24	20-22	1-2	Loose, orange and tan, fine to medium SAND, trace Silt (wet)		
					4-6			
25		S-6	9/9	25-25.8	51-75/3"	Very dense, orange and tan, fine to medium SAND, trace Silt (wet)		
30						(Top 11"): Very dense, orange and tan, fine to medium SAND,		
		S-7	21/21	30-31.8	29-27	trace Silt (wet)		
					135-115/3"	(Bottom 10"): Gray, fine SAND, some Silt (wet)		
						End of Exploration at ±31.8'		

GRANULAR SOILS BLOWS/FT	DENSITY	COHESIVE SOILS BLOWS/FT	DENSITY
0-4	VERY LOOSE	<2	VERY SOFT
4-10	LOOSE	2-4	SOFT
10-30	MEDIUM DENSE	4-8	M. STIFF
30-50	DENSE	8-15	STIFF
>50	VERY DENSE	15-30	V. STIFF
		>30	HARD

REMARKS:

NOTES: 1) STRATIFICATION LINES REPRESENT APPROXIMATE BOUNDARY BETWEEN SOIL TYPES. TRANSITIONS MAY BE GRADUAL.

* 2) WATER LEVEL READINGS HAVE BEEN MADE AT TIMES AND UNDER CONDITIONS STATED, FLUCTUATIONS OF GROUNDWATER MAY OCCUR DUE TO OTHER FACTORS THAN THOSE PRESENT AT THE TIME MEASUREMENTS WERE MADE

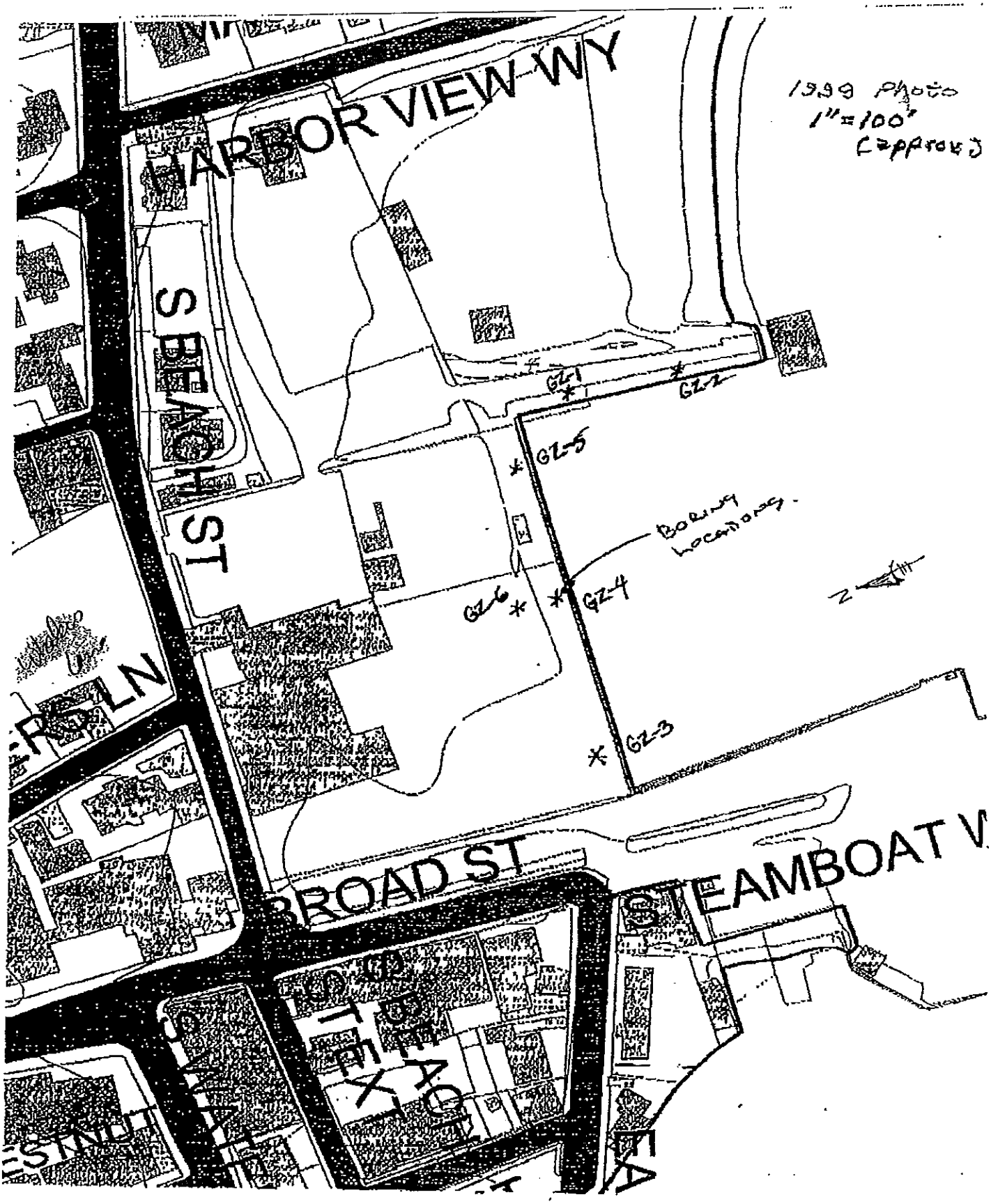

PROJECT 32771
NANTUCKET YACHT CLUB
NANTUCKET, MA

EXPLORATION LOCATION SKETCH

"ATTACHMENT D"

[Prior Chapter 91 License No. 10021 – For Reference Only]

The Commonwealth of Massachusetts

No. 10021

Whereas, Nantucket Harbor Master

of – Nantucket -- in the County of -- Nantucket -- and Commonwealth aforesaid, has applied to the Department of Environmental Protection for license to – construct and maintain a timber pile supported pier, timber sheeting, bituminous and concrete boat ramp and wave barrier with removable post --

and has submitted plans of the same; and whereas due notice of said application, and of the time and place fixed for a hearing thereon, has been given, as required by law, to the -- Board of Selectmen -- of the Town of – Nantucket. --

NOW, said Department, having heard all parties desiring to be heard, and having fully considered said application, hereby, subject to the approval of the Governor, authorizes and licenses the said --

Nantucket Harbor Master --, subject to the provisions of the ninety-first chapter of the General Laws, and of all laws which are or may be in force applicable thereto, to – construct and maintain a timber pile supported pier, timber sheeting, bituminous and concrete boat ramp and wave barrier with removable post --

in and over the waters of the – Nantucket Harbor -- in the -- Town -- of -- Nantucket -- and in accordance with the locations shown and details indicated on the accompanying DEP Plan No. 10021 (10 sheets).

PRINTED ON RECYCLED PAPER

The structures hereby authorized shall be limited to the following uses: to provide public access to navigable waters and shoreline stabilization for the protection of a water dependent use.

This License is issued for an unlimited term, in accordance with 310 CMR 9.15(c).

Existing portions of those structures previously authorized under DPW License No. 5943 shall be maintained in accordance with the terms and conditions of said authorization.

SPECIAL WATERWAYS CONDITIONS

1. In accordance with any license condition, easement, or other public right of lateral passage that exists in the area of the subject property lying between the high and low water marks, the Licensee shall allow the public in the exercise of such rights to pass freely around all structures within such intertidal area. Accordingly, the Licensee shall place and maintain, in good repair, a public access sign on both the northerly and southerly sides of the boat ramp authorized herein, adjacent to the mean high water shoreline. Said signs, provided by the Department, shall be posted immediately upon completion of construction. Nothing in this condition shall be construed as preventing the Licensee from excluding the public from portions of said structure(s) or property not intended for lateral passage.

2. In partial compensation for public use of structures on tidelands of the Commonwealth, which interferes with the rights of the public to use such lands, the Licensee shall allow the public to pass on foot, for any purpose and from dawn to dusk, within the area of the subject property lying seaward of the high water mark. This condition shall not be construed to prevent the Licensee from taking reasonable measures to discourage unlawful activities by users of the area(s) intended for public passage, including but not limited to trespassing on the adjacent private areas and deposit of refuse of any kind or nature in the water or on the shore. Further, the exercise by the public of free on-foot passage in accordance with this condition shall be considered a permitted use to which the limited liability provisions of M.G.L. c.21, s.17c apply.

3. All work authorized herein shall be completed within five (5) years of the date of License issuance. Said construction period may be extended by the Department for one or more one year periods without public notice, provided that the Applicant submits to the Department no later than thirty (30) days prior to the expiration of said construction period a written request to extend the period and provides an adequate justification for said extension.

4. The Licensee shall request, in writing, that the Department issue a Certificate of Compliance in accordance with 310 CMR 9.19 within sixty (60) days of completion of the licensed project. The request shall be accompanied by a certification by a registered professional engineer or registered land surveyor licensed in the Commonwealth that the project was completed in accordance with the License.

Please see pages 3 for additional conditions to this license.

Duplicate of said plan, number 10021 is on file in the office of said Department, and original of said plan accompanies this License, and is to be referred to as a part hereof.

STANDARD WATERWAYS LICENSE CONDITIONS

1. Acceptance of this Waterways License shall constitute an agreement by the Licensee to conform with all terms and conditions stated herein.

2. This License is granted upon the express condition that any and all other applicable authorizations necessitated due to the provisions hereof shall be secured by the Licensee prior to the commencement of any activity or use authorized pursuant to this License.

3. Any change in use or any substantial structural alteration of any structure or fill authorized herein shall require the issuance by the Department of a new Waterways License in accordance with the provisions and procedures established in Chapter 91 of the Massachusetts General Laws. Any unauthorized substantial change in use or unauthorized substantial structural alteration of any structure or fill authorized herein shall render this Waterways License void.

4. This Waterways License shall be revocable by the Department for noncompliance with the terms and conditions set forth herein. This license may be revoked after the Department has given written notice of the alleged noncompliance to the Licensee and those persons who have filed a written request for such notice with the Department and afforded them a reasonable opportunity to correct said noncompliance. Failure to correct said noncompliance after the issuance of a written notice by the Department shall render this Waterways License void and the Commonwealth may proceed to remove or cause removal of any structure or fill authorized herein at the expense of the Licensee, its successors and assigns as an unauthorized and unlawful structure and/or fill.

5. The structures and/or fill authorized herein shall be maintained in good repair and in accordance with the terms and conditions stated herein and the details indicated on the accompanying license plans.

6. Nothing in this Waterways License shall be construed as authorizing encroachment in, on or over property not owned or controlled by the Licensee, except with the written consent of the owner or owners thereof.

7. This Waterways License is granted subject to all applicable Federal, State, County, and Municipal laws, ordinances and regulations including but not limited to a valid final Order of Conditions issued pursuant to the Wetlands Protection Act, G.L. Chapter 131, s.40.

8. This Waterways License is granted upon the express condition that the use of the structures and/or fill authorized hereby shall be in strict conformance with all applicable requirements and authorizations of the DEP, Division of Water Pollution Control.

9. This License authorizes structure(s) and/or fill on:

_x_ Private Tidelands. In accordance with the public easement that exists by law on private tidelands, the licensee shall allow the public to use and to pass freely upon the area of the subject property lying between the high and low water marks, for the purposes of fishing, fowling, navigation, and the natural derivatives thereof.

_x_ Commonwealth Tidelands. The Licensee shall not restrict the public's right to use and to pass freely, for any lawful purpose, upon lands lying seaward of the low water mark. Said lands are held in trust by the Commonwealth for the benefit of the public.

__ a Great Pond of the Commonwealth. The Licensee shall not restrict the public's right to use and to pass freely upon lands lying seaward of the high water mark for any lawful purpose.

No restriction on the exercise of these public rights shall be imposed unless otherwise expressly provided in this license.

10. Unless otherwise expressly provided by this license, the licensee shall not limit the hours of availability of any areas of the subject property designated for public passage, nor place any gates, fences, or other structures on such areas in a manner that would impede or discourage the free flow of pedestrian movement thereon.

The amount of tide-water displaced by the work hereby authorized has been ascertained by said Department, and compensation thereof has been made by the said – Nantucket Harbor Master -- by paying into the treasury of the Commonwealth – zero dollars and zero cents ($0.00) -- for each cubic yard so displaced, being the amount hereby assessed by said Department. (0.0 cy = $0.00)

Nothing in this License shall be so construed as to impair the legal rights of any person.

This License shall be void unless the same and the accompanying plan are recorded within 60 days from the date hereof, in the Registry of Deeds for the County of Nantucket.

IN WITNESS WHEREAS, said Department of Environmental Protection have hereunto set their hands this 8th day of July in the year two thousand four.

for Program Chief _____

Department of Environmental Protection

Commissioner _____

THE COMMONWEALTH OF MASSACHUSETTS

This license is approved in consideration of the payment into the treasury of the Commonwealth by the said – Nantucket Harbor Master --

of the further sum of – zero dollars and zero cents ($0.00) --

the amount determined by the Governor as a just and equitable charge for rights and privileges hereby granted in the land of the Commonwealth.

BOSTON,

Approved by the Governor.

Mitt Romney

Governor

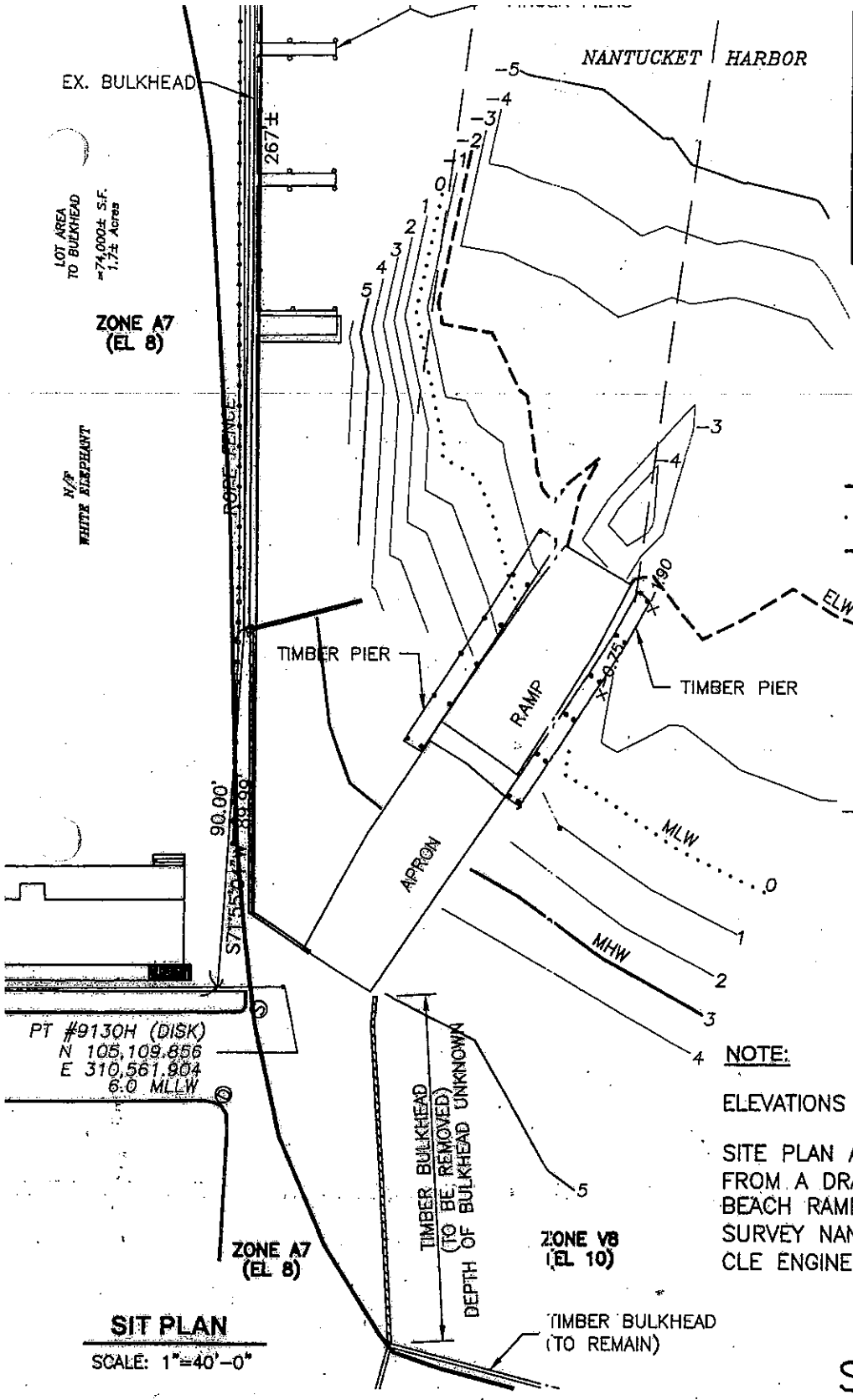

SIT PLAN

SCALE: 1"=40'-0"

NO SCALE

LOCUS PLAN

DATUM: MLW = 0.0'

MHW = +3.06'
MLW = 0.0'
ELW = −2.1'

NOTE:

ELEVATIONS REFERENCED TO MLW.

SITE PLAN AND TOPOGRAPHY OBTAINED FROM A DRAWING ENTITLED "CHILDREN'S BEACH RAMP AND BASIN CONDITION SURVEY NANTUCKET, MA" PREPARED BY CLE ENGINEERING, INC. DATED 08/09/01

COMMONWEALTH OF MASSACHUSETTS
FREDERICK A. RADCLIFFE, JR.
No. 35582
REGISTERED PROFESSIONAL ENGINEER

SHEET 1 OF 10

PLANS ACCOMPANYING PETITION OF
NANTUCKET HARBOR MASTER
TO CONSTRUCT AND MAINTAIN A TIMBER PILE SUPPORTED PIER, TIMBER SHEETING, AND BITUMINOUS AND CONCRETE BOAT RAMP AT CHILDREN'S BEACH – NANTUCKET
COUNTY OF NANTUCKET, MASSACHUSETTS
APRIL 2002

LICENSE PLAN NO. 10021

Approved by Department of Environmental Protection of Massachusetts

JUL 0 8 2004

LICENSE PLAN NO. 10021
Approved by Department of Environmental Protection
Date:
JUL 0 8 2004

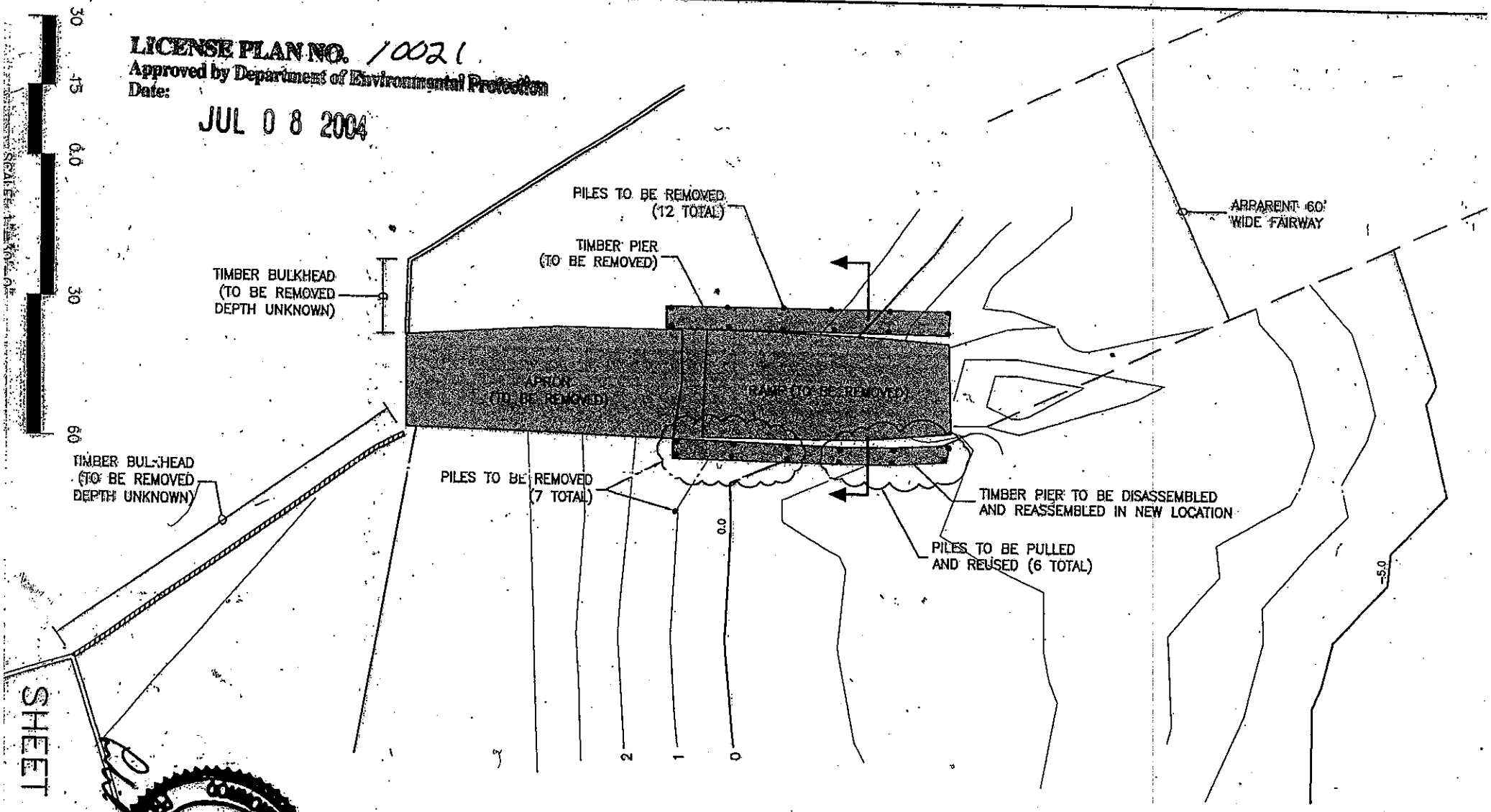

EXISTING/DEMOLITION PLAN

SCALE: 1"=30'-0"

COMMONWEALTH OF MASSACHUSETTS
FREDERICK A. RADCLIFFE, JR.
No. 36582
REGISTERED PROFESSIONAL ENGINEER

SHEET 2 OF 10

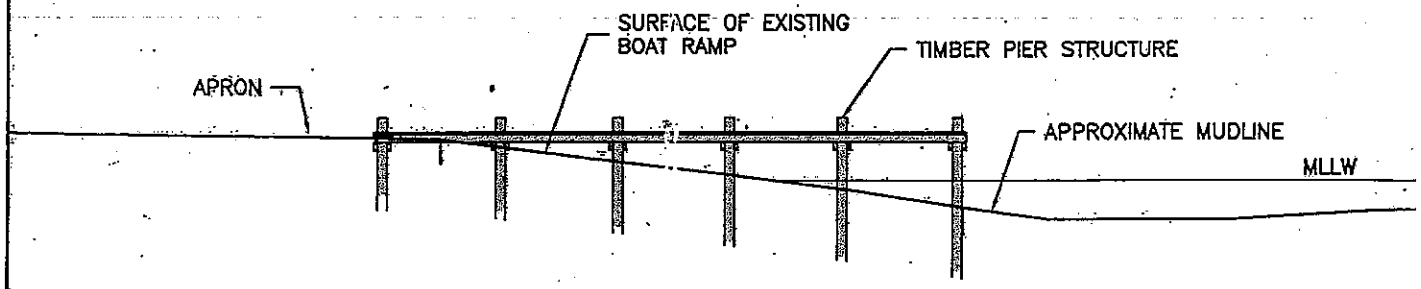

EXISTING / DEMOLITION ELEVATION

SCALE: 1"=20'-0"

SCALE: 1"=20'-0"

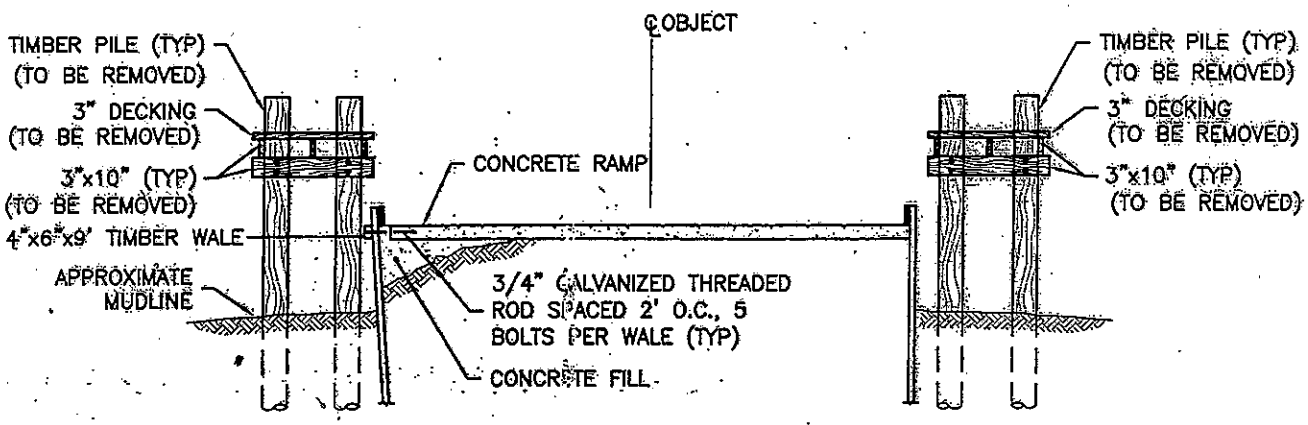

TYPICAL SECTION

SCALE: 1/8"=1'-0"

SCALE: 1/8"=1'-0"

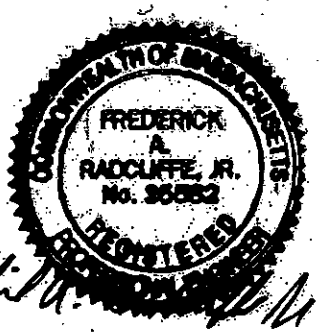

LICENSE PLAN NO. 10021
Approved by Department of Environmental Protection
Date: JUL 0 8 2004

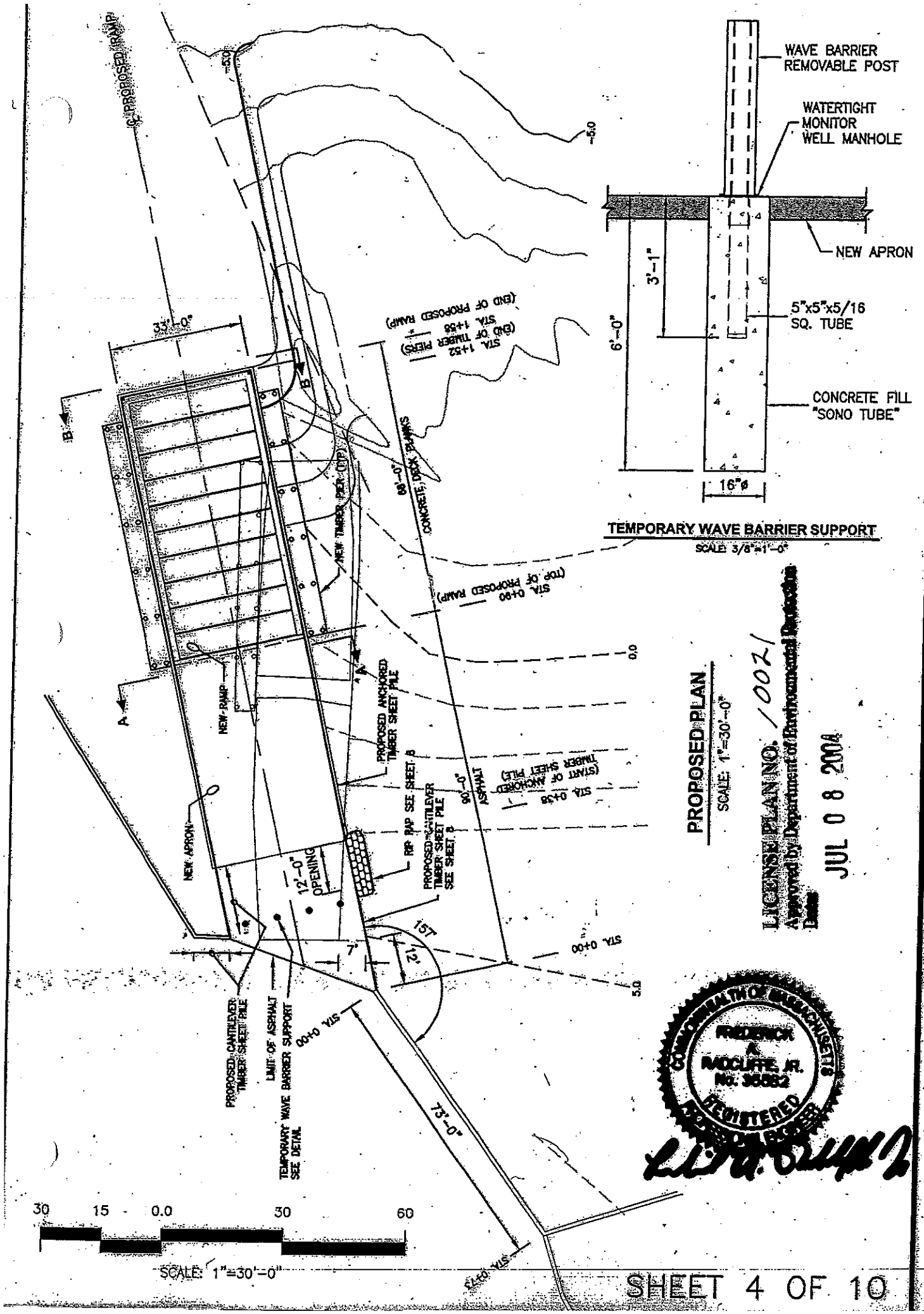
WAVE BARRIER REMOVABLE POST
WATERTIGHT MONITOR WELL MANHOLE
NEW APRON
3'-1"
6'-0"
5"x5"x5/16 SQ. TUBE
CONCRETE FILL "SONO TUBE"
16"ø
TEMPORARY WAVE BARRIER SUPPORT
SCALE: 3/8"=1'-0"
PROPOSED PLAN
SCALE: 1"=30'-0"
LICENSE PLAN NO. 10021
Approved by Department of Environmental Protection
Date JUL 0 8 2004
COMMONWEALTH OF MASSACHUSETTS
FREDERICK A. RACLIFFE, JR.
No. 30682
REGISTERED PROFESSIONAL ENGINEER
℄ PROPOSED RAMP
33'-0"
B
A
NEW RAMP
NEW APRON
NEW TIMBER PIER (TYP)
CONCRETE DECK BLOCKS
68'-0"
STA. 1+52 (END OF TIMBER PIERS)
STA. 1+56 (END OF PROPOSED RAMP)
STA. 0+90 (TOP OF PROPOSED RAMP)
PROPOSED ANCHORED TIMBER SHEET PILE
RIP RAP SEE SHEET 8
PROPOSED CANTILEVER TIMBER SHEET PILE SEE SHEET 8
STA. 0+38 (START OF ANCHORED TIMBER SHEET PILE)
90'-0"
ASPHALT
12'-0" OPENING
7'
15'
12'
STA. 0+00
PROPOSED CANTILEVER TIMBER SHEET PILE
LIMIT OF ASPHALT
TEMPORARY WAVE BARRIER SUPPORT SEE DETAIL
73'-0"
STA. 0+73
0.0
5.0
30 15 0.0 30 60
SCALE: 1"=30'-0"

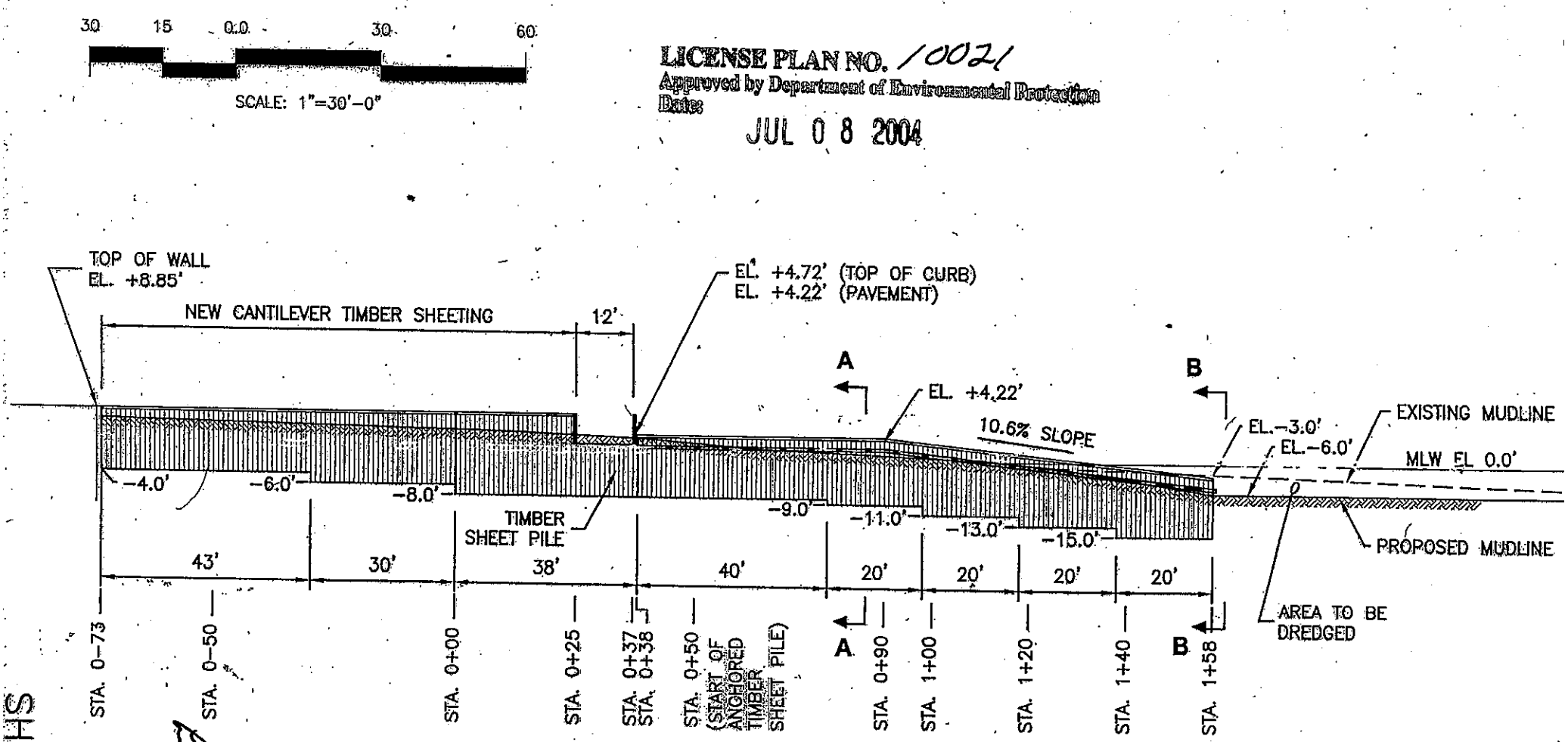

LICENSE PLAN NO. 10021
Approved by Department of Environmental Protection
Date:
JUL 0 8 2004

PROPOSED ELEVATION
SCALE: 1"=30'-0"

COMMONWEALTH OF MASSACHUSETTS
REGISTERED PROFESSIONAL ENGINEER
FREDERICK RADCLIFFE, JR.
No. 35532

SHEET 5 OF 10

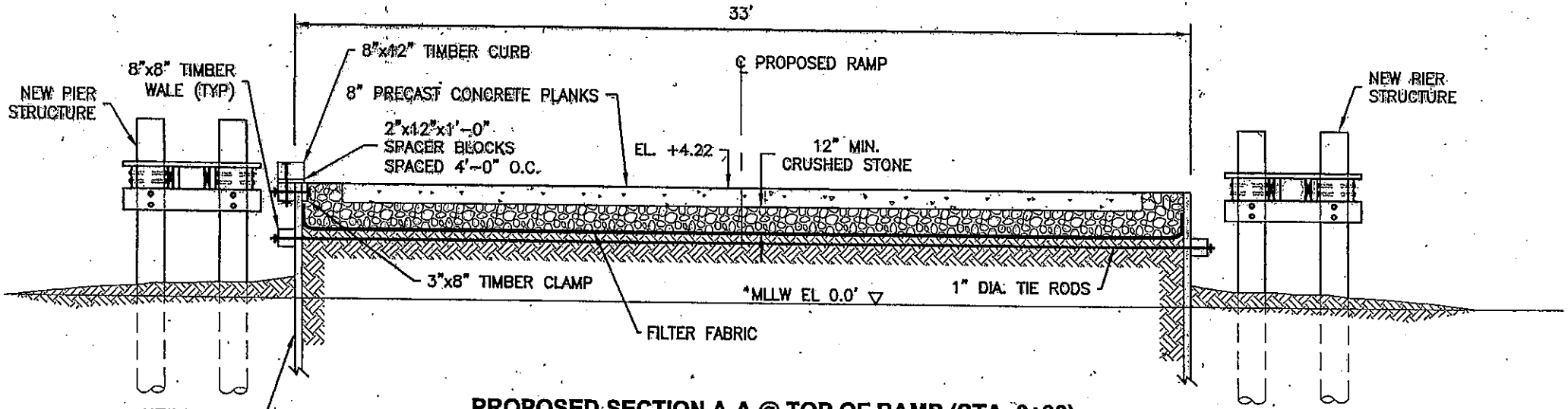

PROPOSED SECTION A-A @ TOP OF RAMP (STA. 0+90)

SCALE: 3/16"=1'-0"

LICENSE PLAN NO. 10021
Approved by Department of Environmental Protection
Date: JUL 0 8 2004

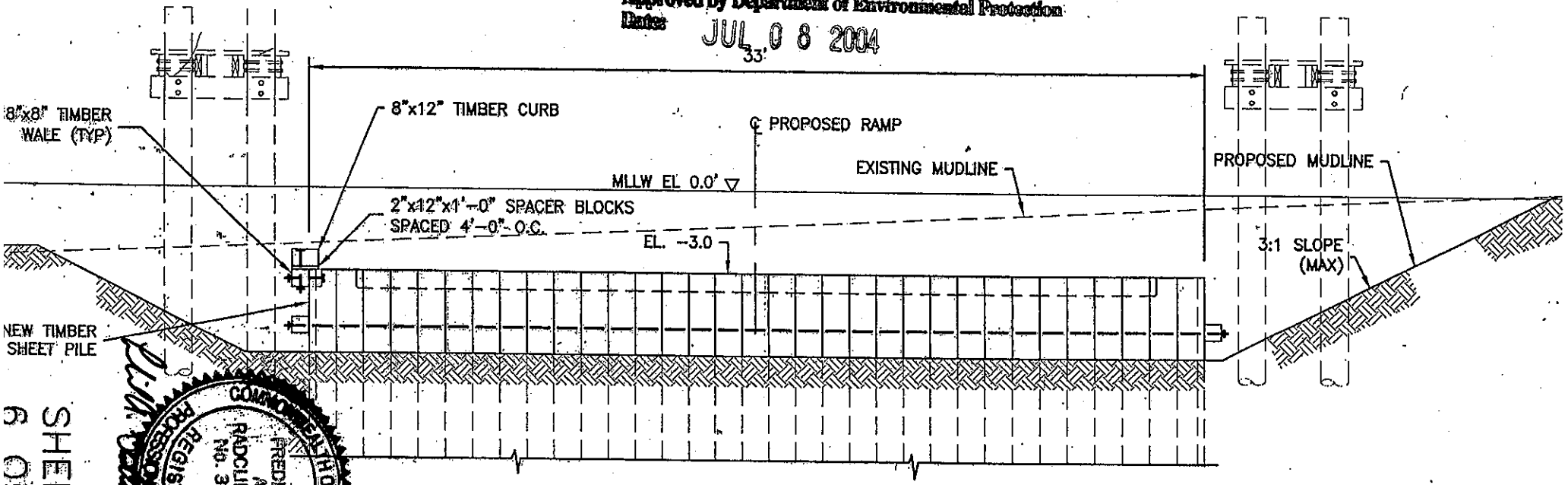

PROPOSED SECTION B-B @ END OF RAMP (STA 1+58)

SCALE: 3/16"=1'-0"

30 15 0.0 30 60

SCALE: 3/16"=1'-0"

COMMONWEALTH OF MASSACHUSETTS
FREDERICK A. RADCLIFFE, JR.
No. 35582
REGISTERED PROFESSIONAL ENGINEER

SHEET 6 OF 10

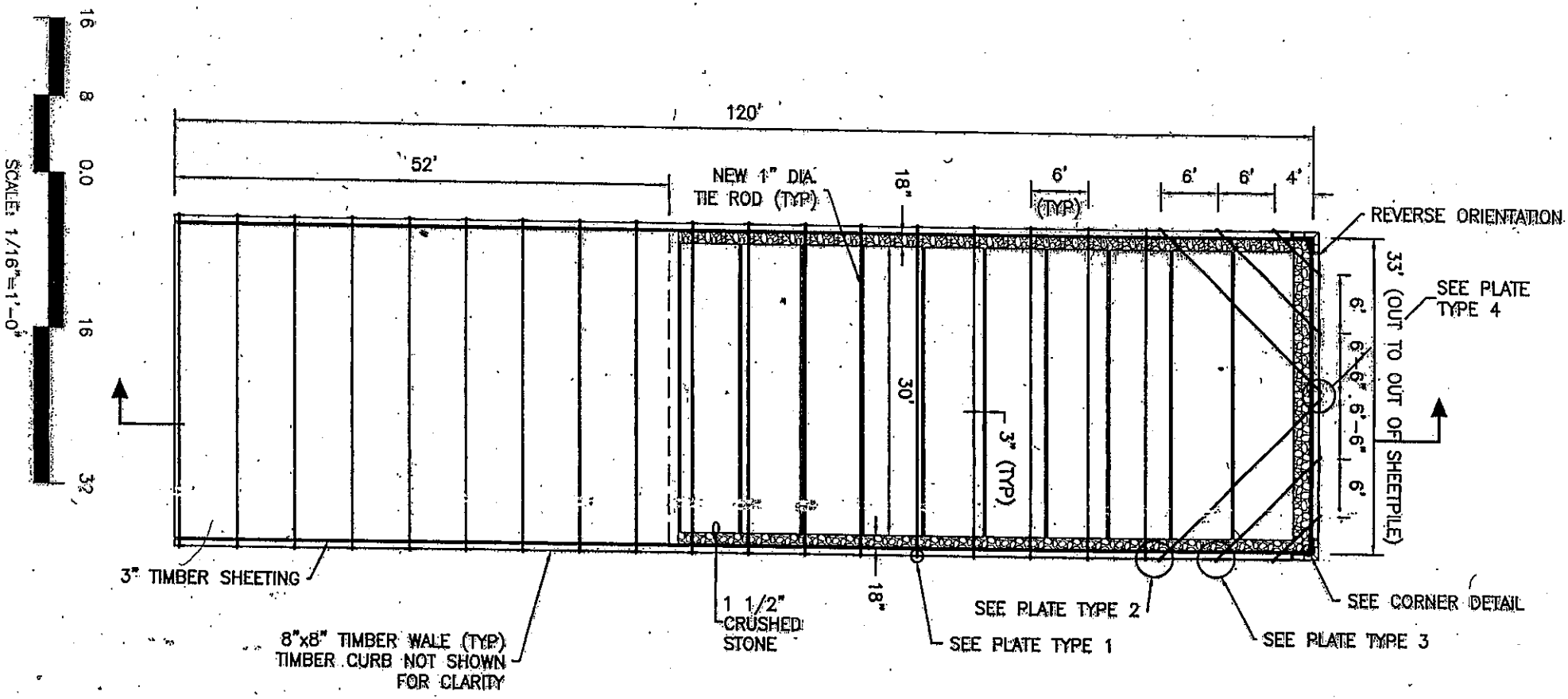

PROPOSED RAMP PLAN

SCALE: 1/16"=1'-0"

NOTES:

1. TIE RODS SHALL BE A36 GRADE.
2. THREADS ARE UNC AND 4UN CLASS 2B.
3. COAT TIE RODS, TURNBUCKLES AND EXPOSED HARDWARE WITH HOT-APPLIED COAL TAR COATING IN TAPE FORM.
4. TURNBUCKLES SHALL HAVE A SAFE WORKING LOAD OF 10,000 POUNDS.
5. LENGTH OF TIE RODS SHALL BE DETERMINED BY CONTTRACTOR IN THE FIELD.

LICENSE PLAN NO. 10021
Approved by Department of Environmental Protection
Date: JUL 0 8 2004

COMMONWEALTH OF MASSACHUSETTS
FREDERICK A. RADCLIFFE, JR.
No. 35582
REGISTERED PROFESSIONAL ENGINEER

SHEET 7 OF 10

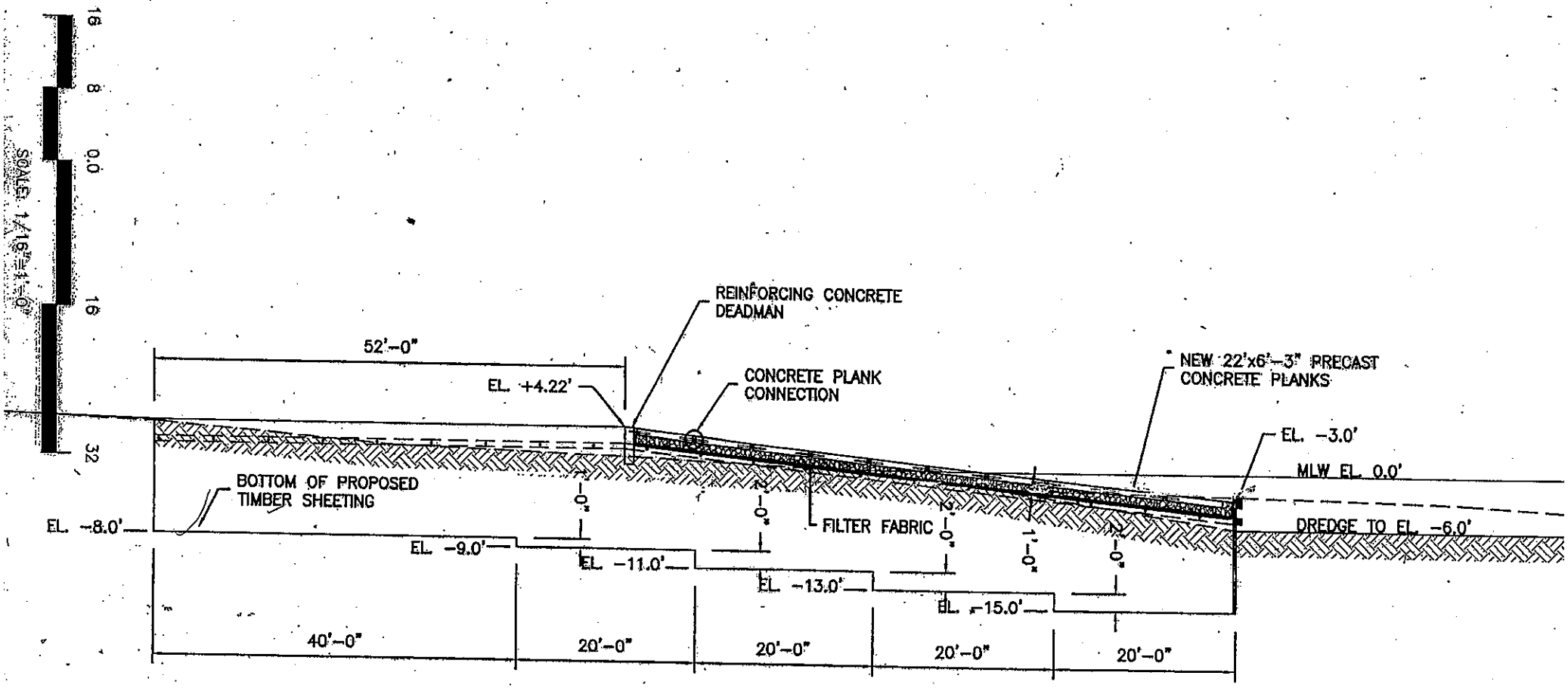

NOTE:

LAP FILTER FABRIC MINIMUM 6" ALONG TIMBER SHEETING AND CONCRETE PLANKS.

PROPOSED RAMP SECTION

SCALE: 1/16"=1'-0"

COMMONWEALTH OF MASSACHUSETTS
FREDERICK A. RADCLIFFE, JR.
No. 35582
REGISTERED PROFESSIONAL ENGINEER

LICENSE PLAN NO. 10021

Approved by Department of Environmental Protection

Date: JUL 0 8 2004

SHEET 8 OF 10

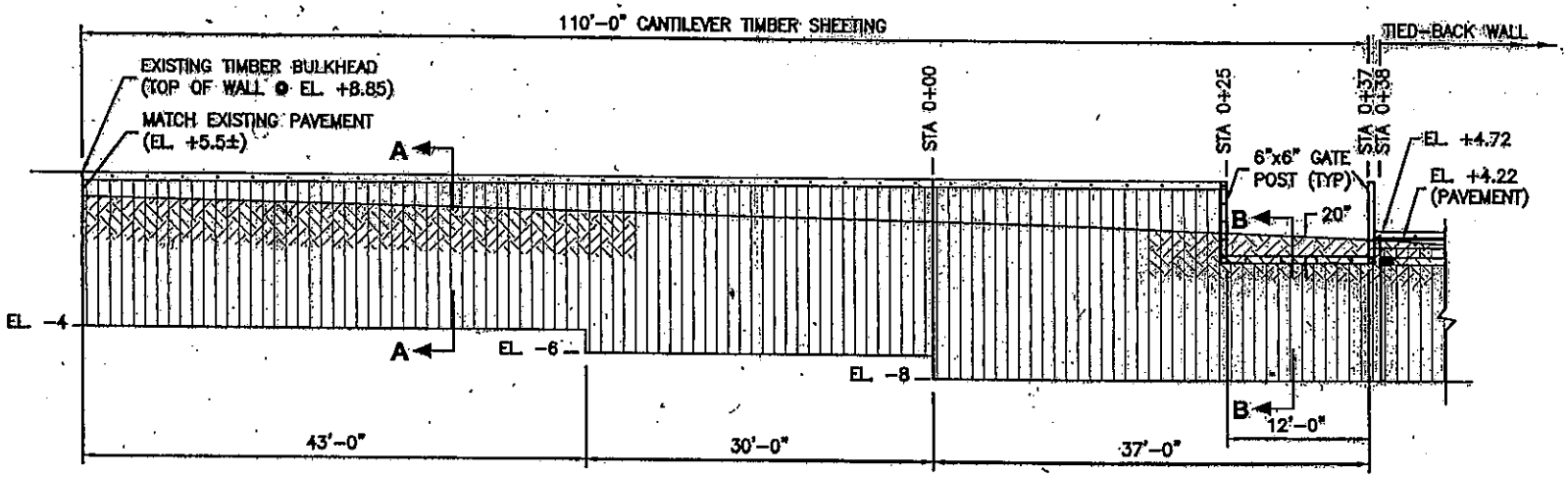

ELEVATION

SCALE: 1/16"=1'-0"

NOTE:

TIP ELEVATION OF CANTILEVER TIMBER SHEETING NORTH OF PROPOSED RAMP IS EL.-5'. TOP ELEVATION IS EL.+8.85'.

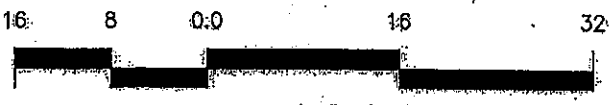

SCALE: 1/16"=1'-0"

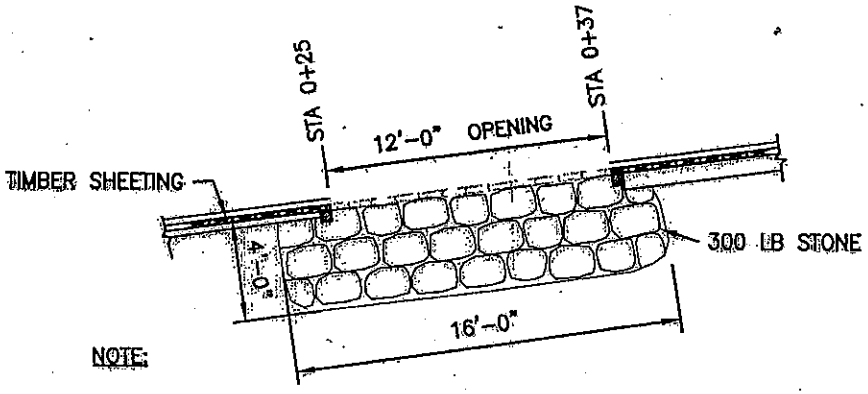

NOTE:

CURB NOT SHOWN FOR CLARITY.

CURB OPENING PLAN

SCALE: 1/8"=1'-0"

SCALE: 1/8"=1'-0"

LICENSE PLAN NO. 10021

Approved by Department of Environmental Protection

Date: JUL 08 2004

COMMONWEALTH OF MASSACHUSETTS
FREDERICK A. RADCLIFFE, JR.
No. 35582
REGISTERED PROFESSIONAL ENGINEER

SHEET 9 OF 10

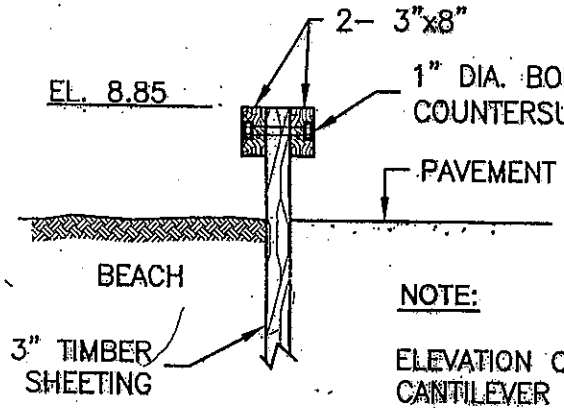

NOTE:

ELEVATION OF TOP OF CANTILEVER SHEETING NORTH OF PROPOSED RAMP IS 8.85'

SECTION A - A

SCALE: 1/2"=1'-0"

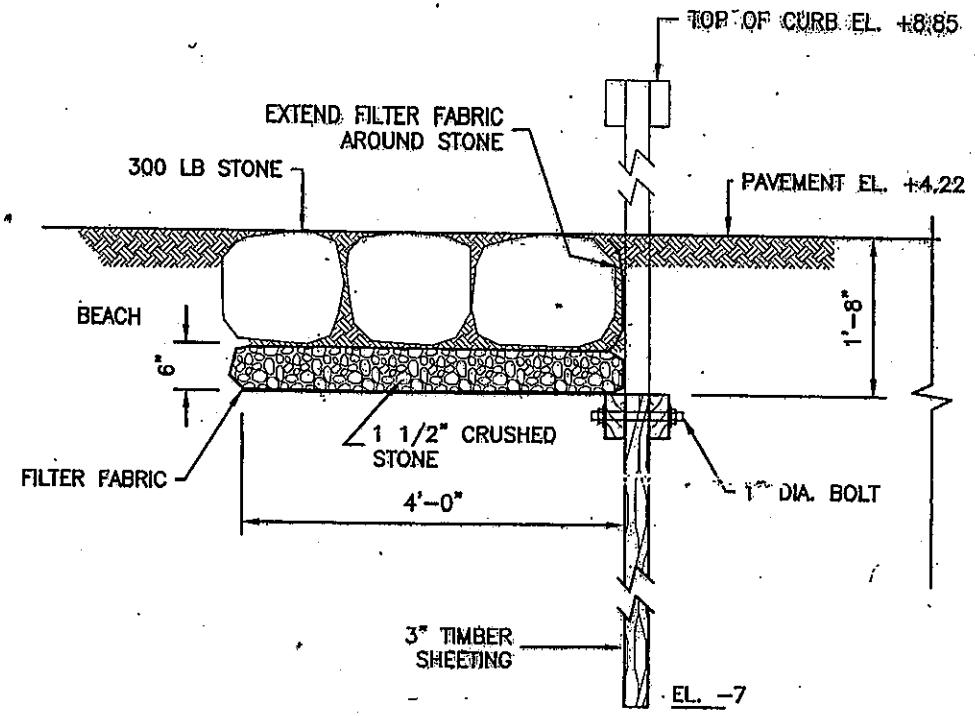

CURB OPENING - SECTION B-B

SCALE: 1/2"=1'-0"

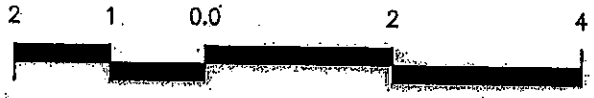

SCALE: 1/2"=1'-0"

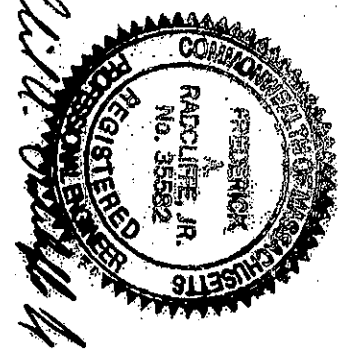

LICENSE PLAN NO. 10021

Approved by Department of Environmental Protection

Date: JUL 0 8 2004

SHEET 10 OF 10

© 2016 – GZA GeoEnvironmental, Inc. GZA–J:\172000's\18.0172082.00 Nantucket Three Projects – Dredging, Floats, Ramp\Figures–CAD\03_Children's Beach Ramp\Children's Beach Boat Ramp– November 2016.dwg [Construction Drawings – COVER] October 21, 2016 – 11:30am joshua.zall

CHILDREN'S BEACH BOAT RAMP IMPROVEMENT PROJECT
15 HARBOR VIEW WAY

PREPARED FOR:

TOWN OF NANTUCKET
34 WASHINGTON STREET
NANTUCKET, MASSACHUSETTS

DRAWING INDEX:

SHEET 1	COVER SHEET AND NOTES
SHEET 2	EXISTING SITE PLAN
SHEET 3	EXISTING CONDITIONS
SHEET 4	PROPOSED SITE PLAN
SHEET 5	PROPOSED IMPROVEMENTS

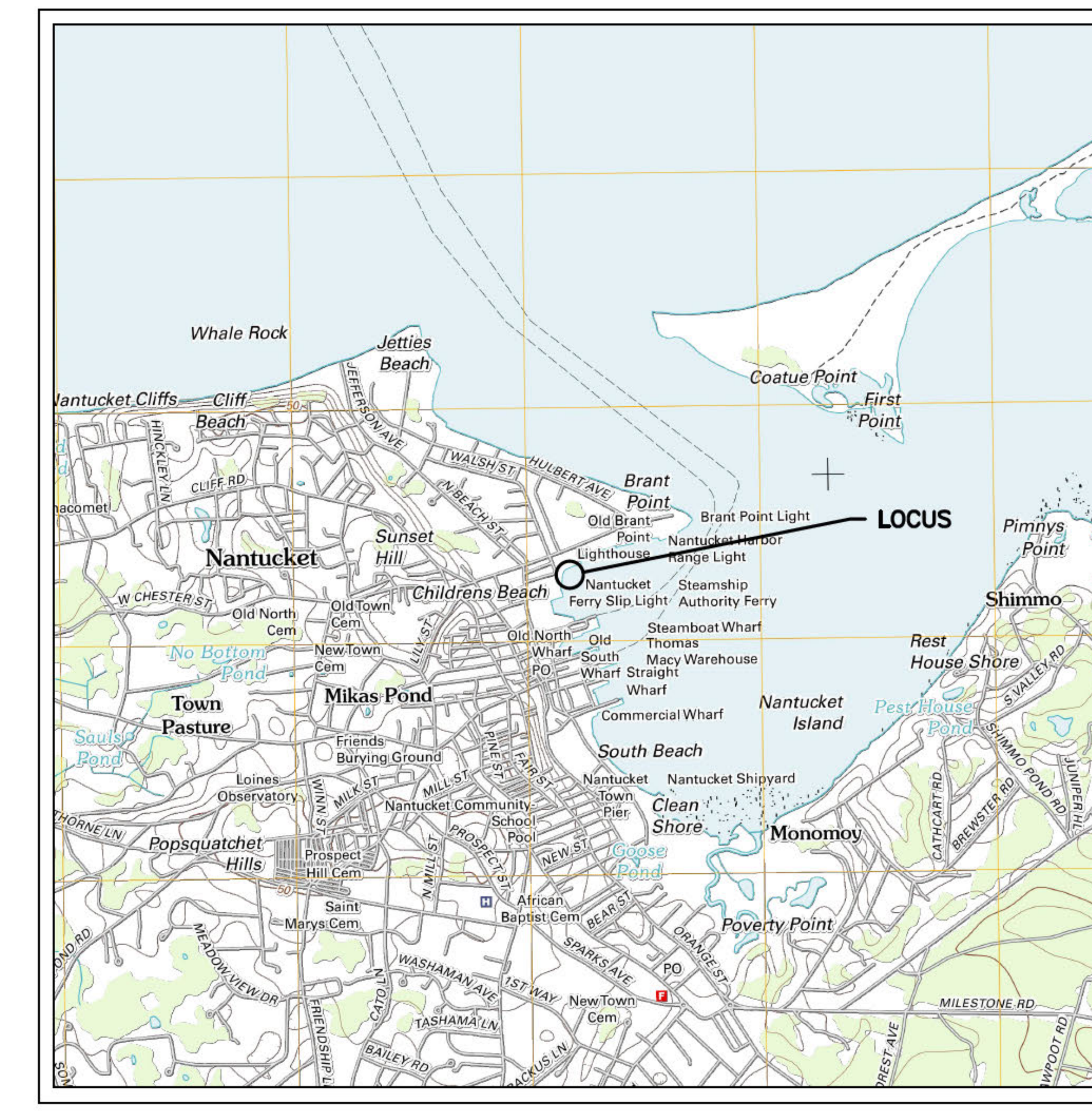

LOCUS PLAN

SCALE: NOT TO SCALE

GENERAL NOTES:

1. ELEVATIONS AND SOUNDINGS ARE IN FEET BASED ON THE MEAN LOW WATER (MLW) PROJECT DATUM: MLW=0.0, MHW=+3.04, FEMA 100–YR FLOOD EL=+11.9.

2. LIMITED TOPOGRAPHIC AND BATHYMETRIC SURVEY PERFORMED BY GZA GEOENVIRONMENTAL, INC. ON OCTOBER 2, 2014, AND REPRESENT CONDITIONS AT THE TIME OF THE SURVEY.

3. SITE BENCHMARK IS A NATIONAL OCEAN SURVEY (NOS) DISK STAMPED 9130H. THE DISK IS SET IN THE WEST CORNER OF A 6.4–FT X 8.1–FT CONCRETE STORM SEWER CHECK TRAP LOCATION AT THE INTERSECTION OF WALSH STREET AND HARBOR VIEW WAY. BENCHMARK ELEVATION =+5.58 MLW.

4. CONTRACTOR SHALL PERFORM ALL WORK AS PER THE ORDER OF CONDITIONS ISSUED BY THE TOWN OF NANTUCKET CONSERVATION COMMISSION. A COPY OF THE ORDER OF CONDITIONS SHALL BE ON–SITE AT ALL TIMES DURING THE WORK. ANY CHANGES FROM THE ORDER OF CONDITIONS AND/OR THESE CONSTRUCTION PLANS SHALL BE APPROVED BY THE OWNER.

5. THE CONTRACTOR SHALL PROVIDE AND POST D.E.P. WETLAND PROJECT SIGNS IN CONFORMANCE WITH THE ORDER OF CONDITIONS FOR THE SITE.

6. STORAGE, FUELING AND LUBRICATION OF EQUIPMENT AND MOTOR VEHICLES SHALL BE CONDUCTED IN A MANNER THAT AFFORDS THE MAXIMUM PROTECTION AGAINST SPILL AND EVAPORATION. FUEL, LUBRICANTS AND OIL SHALL BE MANAGED AND STORED IN ACCORDANCE WITH FEDERAL, STATE, REGIONAL AND LOCAL LAWS AND REGULATIONS. THERE SHALL BE NO STORAGE OF FUEL ON THE PROJECT SITE. FUEL MUST BE BROUGHT TO THE PROJECT SITE AS NEEDED. EQUIPMENT OPERATION, ACTIVITIES, OR PROCESSES PERFORMED BY THE CONTRACTOR SHALL BE IN ACCORDANCE WITH FEDERAL AND STATE AIR EMISSION AND PERFORMANCE LAWS AND STANDARDS.

7. FUEL SPILL CONTAINMENT SYSTEMS SHALL BE ON–SITE PRIOR TO CONSTRUCTION.

8 ALL WORK SHALL BE PERFORMED IN A SAFE MANNER, IN ACCORDANCE WITH FEDERAL, STATE AND LOCAL REGULATIONS AND SO AS TO PROTECT THE PUBLIC.

CONSTRUCTION NOTES:

1. THE WORK UNDER THIS CONTRACT SHALL INCLUDE, BUT IS NOT LIMITED TO, THE FOLLOWING:
   A. DESIGN AND INSTALLATION OF A TEMPORARY STEEL SHEETPILE COFFERDAM;
   B. INSTALLATION OF A TEMPORARY ACCESS RAMP FOR LAUNCHING OF BOATS DURING CONSTRUCTION. ACCESS RAMP SHALL BE PLACED ON CHILDREN'S BEACH ADJACENT TO THE EXISTING BOAT RAMP;
   C. REMOVAL AND STOCKPILING OF EXISTING PRE–CAST CONCRETE PLANKS. DAMAGED PLANK CONNECTIONS SHALL BE REPAIRED, AS NECESSARY;
   D. RE–GRADING EXISTING CRUSHED STONE BASE AND PLACING ADDITIONAL CRUSHED STONE BASE MATERIAL, AS NECESSARY;
   E. RE–SETTING OF EXISTING PRE–CAST CONCRETE PLANKS;
   F. SUPPLY AND INSTALLATION OF NEW PRE–CAST CONCRETE PLANKS;
   G. SUPPLY AND INSTALLATION OF STONE–FILLED GABION MATTRESSES FOR SCOUR PROTECTION;
   H. DRIVING OF 4 ADDITIONAL TIMBER PILES AND ASSOCIATED TIMBER FRAMING AND DECKING TO EXTENT THE SOUTH PIER APPROXIMATELY 12 LINEAR FEET.
   I. TIMBER FENDERING INSTALLATION ALONG BOTH TIMBER PIERS.
   J. REMOVAL OF TEMPORARY ACCESS RAMP AND COFFERDAM.

2. THE CONTRACTOR IS ADVISED THAT THE SPECIFICATIONS FORM A PART OF THE CONTRACT DOCUMENTS AND ALL WORK SHALL BE PERFORMED IN ACCORDANCE WITH THE SPECIFICATIONS AND THE DRAWINGS. THE CONTRACTOR SHALL KEEP A COPY OF THE DRAWINGS AND SPECIFICATIONS ON SITE AT ALL TIME DURING WORK.

3. EXISTING DIMENSIONS, ELEVATIONS, AND CONDITIONS RELATING TO THE WORK SHALL BE VERIFIED BY THE CONTRACTOR PRIOR TO ORDERING MATERIALS AND COMMENCING WORK.

4. FIELD VERIFY ALL WORK POINT LOCATIONS AND ADVISE OWNER OF ANY DISCREPANCIES BETWEEN ACTUAL LOCATIONS AND THOSE SHOWN ON DRAWINGS BEFORE PROCEEDING WITH WORK.

5. LOCATION OR PRESENCE OF UTILITIES SHOWN ON THESE DRAWINGS ARE APPROXIMATE. CONTRACTOR MUST NOTIFY DIGSAFE 72 HOURS PRIOR TO COMMENCING WORK. VERIFY LOCATIONS, DEPTHS AND OVERHEAD CLEARANCE OF ALL EXISTING UTILITIES AND NOTIFY THE APPROPRIATE UTILITY COMPANY AND AUTHORITY TO ALLOW MARKING OF THEIR LINES.

6. CONTRACTOR SHALL EXERCISE EXTREME CAUTION TO AVOID DAMAGE TO ANY EXISTING UTILITIES TO REMAIN IN PLACE DURING CONSTRUCTION AND/OR AFTER CONSTRUCTION IS COMPLETE.

DEMOLITION NOTES:

1. THE CONTRACTOR SHALL PROVIDE AND MAINTAIN TEMPORARY CONSTRUCTION FENCES AND BARRIERS AROUND THE CONTRACTOR WORK AREA SHOWN. THE CONTRACTOR SHALL COORDINATE ACCESS AND BARRIERS WITH THE NANTUCKET HARBOR MASTER.

2. DEBRIS AND TURBIDITY BOOMS SHALL BE PLACED AROUND THE LIMIT OF WORK. DEBRIS SHALL BE REMOVED DAILY.

3. ALL MATERIAL REMOVED AND NOT REUSED, OR TO REMAIN THE PROPERTY OF THE TOWN, SHALL BECOME THE PROPERTY OF THE CONTRACTOR AND SHALL BE REMOVED DAILY FROM THE SITE OR PROPERLY STORED AT AN APPROVED LOCATION ON SITE. REMOVED MATERIAL SHALL BE DISPOSED OF IN ACCORDANCE WITH ALL LOCAL, STATE, AND FEDERAL LAWS.

ISSUED FOR BIDDING NOVEMBER 2016

UNLESS SPECIFICALLY STATED BY WRITTEN AGREEMENT, THIS DRAWING IS THE SOLE PROPERTY OF GZA GEOENVIRONMENTAL, INC. (GZA). THE INFORMATION SHOWN ON THE DRAWING IS SOLELY FOR USE BY GZA'S CLIENT OR THE CLIENT'S DESIGNATED REPRESENTATIVE FOR THE SPECIFIC PROJECT AND LOCATION IDENTIFIED ON THE DRAWING. THE DRAWING SHALL NOT BE TRANSFERRED, REUSED, COPIED, OR ALTERED IN ANY MANNER FOR USE AT ANY OTHER LOCATION OR FOR ANY OTHER PURPOSE WITHOUT THE PRIOR WRITTEN CONSENT OF GZA. ANY TRANSFER, REUSE, OR MODIFICATION TO THE DRAWING BY THE CLIENT OR OTHERS, WITHOUT THE PRIOR WRITTEN EXPRESS CONSENT OF GZA, WILL BE AT THE USER'S SOLE RISK AND WITHOUT ANY RISK OR LIABILITY TO GZA.

CHILDREN'S BEACH BOAT RAMP IMPROVEMENT PROJECT
15 HARBOR VIEW WAY
NANTUCKET, MA

COVER SHEET AND NOTES

PREPARED BY:
GZA GeoEnvironmental, Inc.
Engineers and Scientists
www.gza.com

PREPARED FOR:
TOWN OF NANTUCKET
34 WASHINGTON STREET
NANTUCKET, MA 02554

PROJ MGR: DAS	REVIEWED BY:	CHECKED BY: DAS	FIGURE
DESIGNED BY: DAS	DRAWN BY: JJZ	SCALE: AS SHOWN	1
DATE: NOVEMBER 2016	PROJECT NO. 18.0172082.00	REVISION NO.	SHEET NO. 1 OF 5

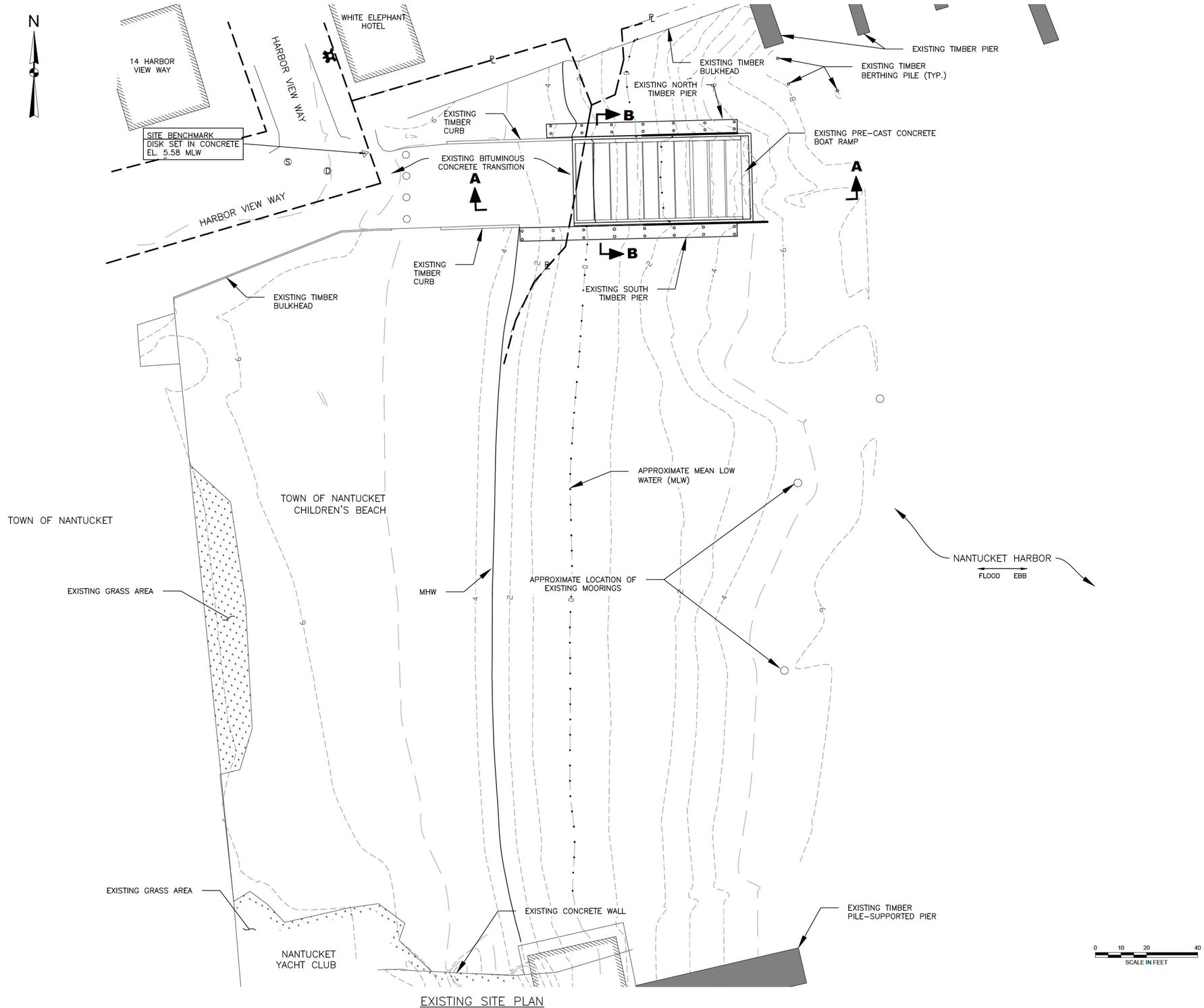

EXISTING SITE PLAN
SCALE: 1"=20'

NOTES:

1. DATUM: MLW=0.0, MHW=+3.04, FEMA 100-YR FLOOD=+11.9.
2. EXISTING SURVEY AND MEASUREMENTS BASED ON FIELD SURVEYS PERFORMED BY GZA GEOENVIRONMENTAL, INC. ON OCTOBER 2, 2014 AND REPRESENT CONDITIONS AT THE TIME OF THE SURVEY.
3. PROPERTY LINE INFORMATION FROM MASS GIS.

ISSUED FOR BIDDING — NOVEMBER 2016

UNLESS SPECIFICALLY STATED BY WRITTEN AGREEMENT, THIS DRAWING IS THE SOLE PROPERTY OF GZA GEOENVIRONMENTAL, INC. (GZA). THE INFORMATION SHOWN ON THE DRAWING IS SOLELY FOR USE BY GZA'S CLIENT OR THE CLIENT'S DESIGNATED REPRESENTATIVE FOR THE SPECIFIC PROJECT AND LOCATION IDENTIFIED ON THE DRAWING. THE DRAWING SHALL NOT BE TRANSFERRED, REUSED, COPIED, OR ALTERED IN ANY MANNER FOR USE AT ANY OTHER LOCATION OR FOR ANY OTHER PURPOSE WITHOUT THE PRIOR WRITTEN CONSENT OF GZA. ANY TRANSFER, REUSE, OR MODIFICATION TO THE DRAWING BY THE CLIENT OR OTHERS, WITHOUT THE PRIOR WRITTEN EXPRESS CONSENT OF GZA, WILL BE AT THE USER'S SOLE RISK AND WITHOUT ANY RISK OR LIABILITY TO GZA.

CHILDREN'S BEACH BOAT RAMP IMPROVEMENT PROJECT
15 HARBOR VIEW WAY
NANTUCKET, MA

EXISTING SITE PLAN

PREPARED BY:
GZA GeoEnvironmental, Inc.
Engineers and Scientists
www.gza.com

PREPARED FOR:
TOWN OF NANTUCKET
4 FAIRGROUNDS ROAD
NANTUCKET, MA 02554

PROJ MGR: DAS	REVIEWED BY:	CHECKED BY:	FIGURE 2
DESIGNED BY: DAS	DRAWN BY: RKT	SCALE: AS NOTED	
DATE: NOVEMBER 2016	PROJECT NO. 18.0172082.00	REVISION NO.	SHEET NO. 2 OF 5

© 2016 – GZA GeoEnvironmental, Inc. GZA-J:\172000's\18.0172082.00 Nantucket Three Projects – Dredging, Floats, Ramp\Figures-CAD\03_Children's Beach Ramp\Children's Beach Boat Ramp– November 2016.dwg [SHEET 1– EXISTING SITE PLAN] October 19, 2016 – 3:49pm rebecca.thormann

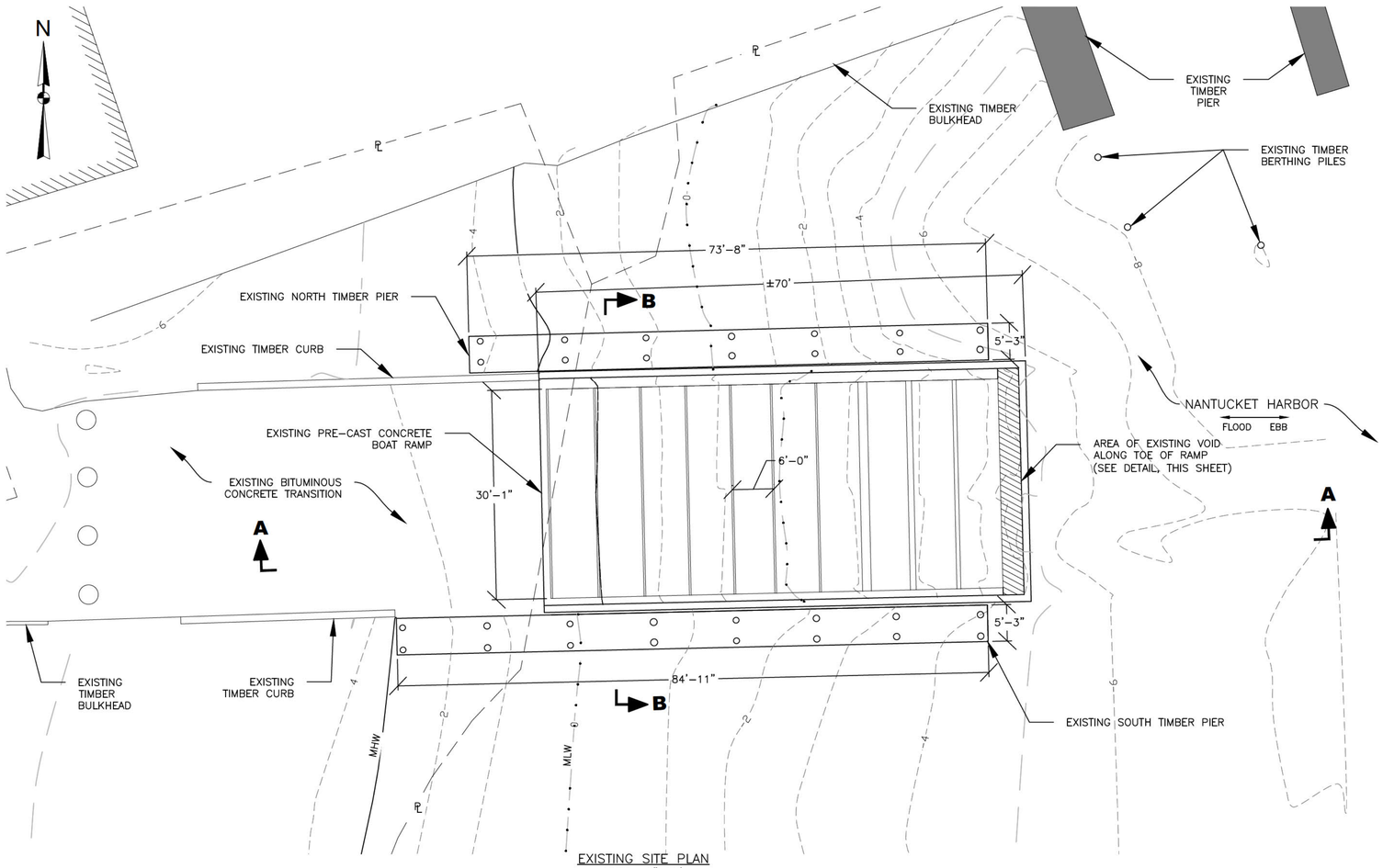

EXISTING SITE PLAN
SCALE: 1"=10'

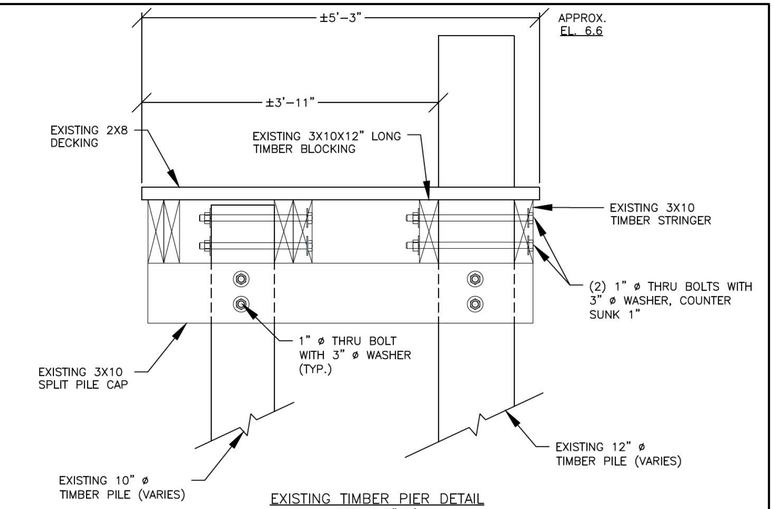

EXISTING TIMBER PIER DETAIL
SCALE: 1"=1'

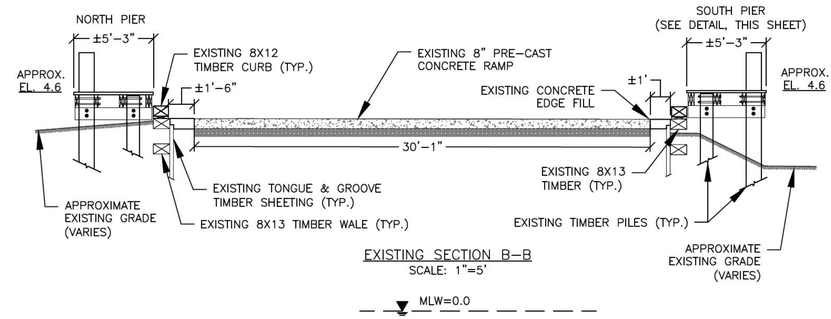

EXISTING SECTION B-B
SCALE: 1"=5'

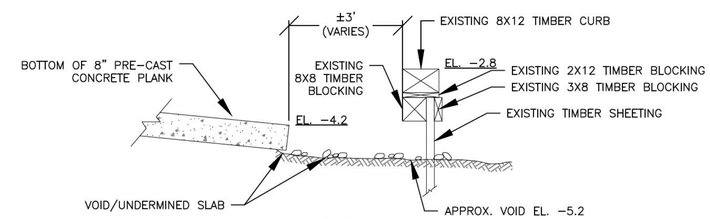

EXISTING DETAIL
SCALE: 1"=2'

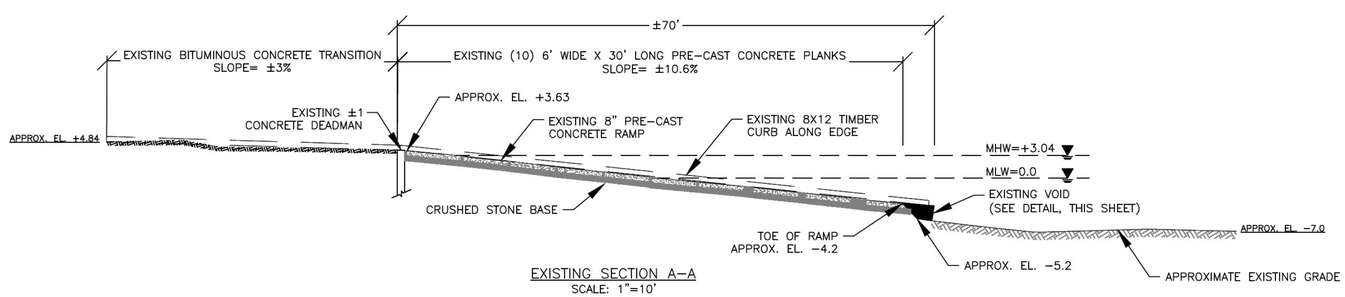

EXISTING SECTION A-A
SCALE: 1"=10'

0 1/2 1 2 SCALE IN FEET

0 1 2 4 SCALE IN FEET

0 2 1/2 5 10 SCALE IN FEET

0 5 10 20 SCALE IN FEET

ISSUED FOR BIDDING — NOVEMBER 2016

UNLESS SPECIFICALLY STATED BY WRITTEN AGREEMENT, THIS DRAWING IS THE SOLE PROPERTY OF GZA GEOENVIRONMENTAL, INC. (GZA). THE INFORMATION SHOWN ON THE DRAWING IS SOLELY FOR USE BY GZA'S CLIENT OR THE CLIENT'S DESIGNATED REPRESENTATIVE FOR THE SPECIFIC PROJECT AND LOCATION IDENTIFIED ON THE DRAWING. THE DRAWING SHALL NOT BE TRANSFERRED, REUSED, COPIED, OR ALTERED IN ANY MANNER FOR USE AT ANY OTHER LOCATION OR FOR ANY OTHER PURPOSE WITHOUT THE PRIOR WRITTEN CONSENT OF GZA. ANY TRANSFER, REUSE, OR MODIFICATION TO THE DRAWING BY THE CLIENT OR OTHERS, WITHOUT THE PRIOR WRITTEN EXPRESS CONSENT OF GZA, WILL BE AT THE USER'S SOLE RISK AND WITHOUT ANY RISK OR LIABILITY TO GZA.

CHILDREN'S BEACH BOAT RAMP IMPROVEMENT PROJECT
15 HARBOR VIEW WAY
NANTUCKET, MA

EXISTING CONDITIONS

PREPARED BY:
GZA GeoEnvironmental, Inc.
Engineers and Scientists
www.gza.com

PREPARED FOR:
TOWN OF NANTUCKET
4 FAIRGROUNDS ROAD
NANTUCKET, MA 02554

PROJ MGR: DAS	REVIEWED BY:	CHECKED BY:	FIGURE 3
DESIGNED BY: DAS	DRAWN BY: RKT	SCALE: AS NOTED	
DATE: NOVEMBER 2016	PROJECT NO. 18.0172082.00	REVISION NO.	SHEET NO. 3 OF 5

© 2016 – GZA GeoEnvironmental, Inc. GZA-J:\172000's\18.0172082.00 Nantucket Three Projects – Dredging, Floats, Ramp\Figures-CAD\03_Children's Beach Ramp\Children's Beach Boat Ramp– November 2016.dwg [SHEET 2– EXISTING CONDITIONS] October 19, 2016 – 3:50pm rebecca.thormann

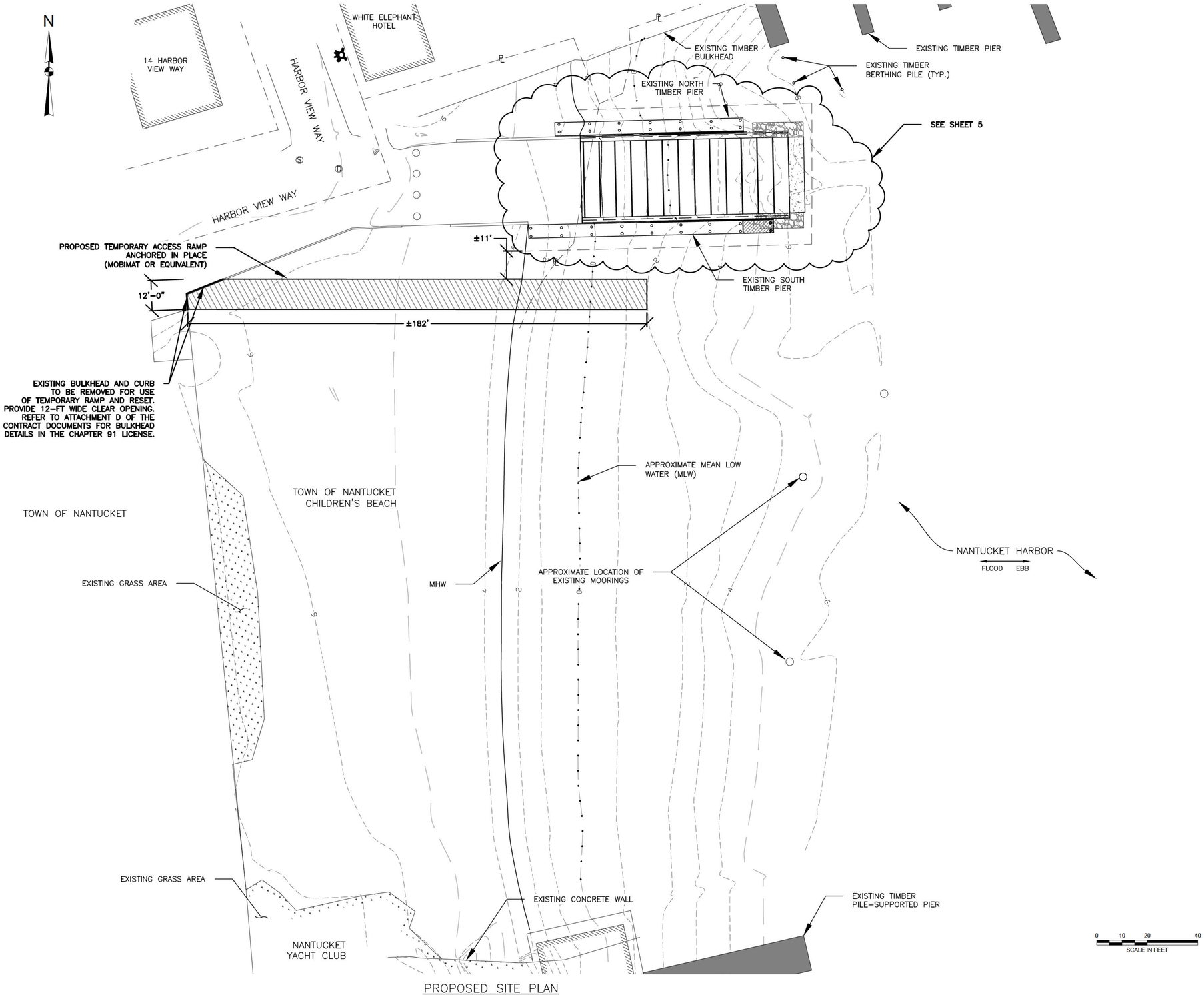

PROPOSED SITE PLAN
SCALE: 1"=20'

NOTES:

1. SEE SHEET 1 FOR GENERAL NOTES.

ISSUED FOR BIDDING NOVEMBER 2016

UNLESS SPECIFICALLY STATED BY WRITTEN AGREEMENT, THIS DRAWING IS THE SOLE PROPERTY OF GZA GEOENVIRONMENTAL, INC. (GZA). THE INFORMATION SHOWN ON THE DRAWING IS SOLELY FOR USE BY GZA'S CLIENT OR THE CLIENT'S DESIGNATED REPRESENTATIVE FOR THE SPECIFIC PROJECT AND LOCATION IDENTIFIED ON THE DRAWING. THE DRAWING SHALL NOT BE TRANSFERRED, REUSED, COPIED, OR ALTERED IN ANY MANNER FOR USE AT ANY OTHER LOCATION OR FOR ANY OTHER PURPOSE WITHOUT THE PRIOR WRITTEN CONSENT OF GZA. ANY TRANSFER, REUSE, OR MODIFICATION TO THE DRAWING BY THE CLIENT OR OTHERS, WITHOUT THE PRIOR WRITTEN EXPRESS CONSENT OF GZA, WILL BE AT THE USER'S SOLE RISK AND WITHOUT ANY RISK OR LIABILITY TO GZA.

CHILDREN'S BEACH BOAT RAMP IMPROVEMENT PROJECT
15 HARBOR VIEW WAY
NANTUCKET, MA

PROPOSED SITE PLAN

PREPARED BY:
GZA GeoEnvironmental, Inc.
Engineers and Scientists
www.gza.com

PREPARED FOR:
TOWN OF NANTUCKET
4 FAIRGROUNDS ROAD
NANTUCKET, MA 02554

PROJ MGR: DAS	REVIEWED BY:	CHECKED BY:	FIGURE
DESIGNED BY: DAS	DRAWN BY: RKT	SCALE: AS NOTED	4
DATE: NOVEMBER 2016	PROJECT NO. 18.0172082.00	REVISION NO.	SHEET NO. 4 OF 5

© 2016 – GZA GeoEnvironmental, Inc. GZA-J:\172000's\18.0172082.00 Nantucket Three Projects – Dredging, Floats, Ramp\Figures-CAD\03_Children's Beach Ramp\Children's Beach Boat Ramp– November 2016.dwg [SHEET 3– PROPOSED SITE PLAN] October 21, 2016 – 1:35pm joshua.zall

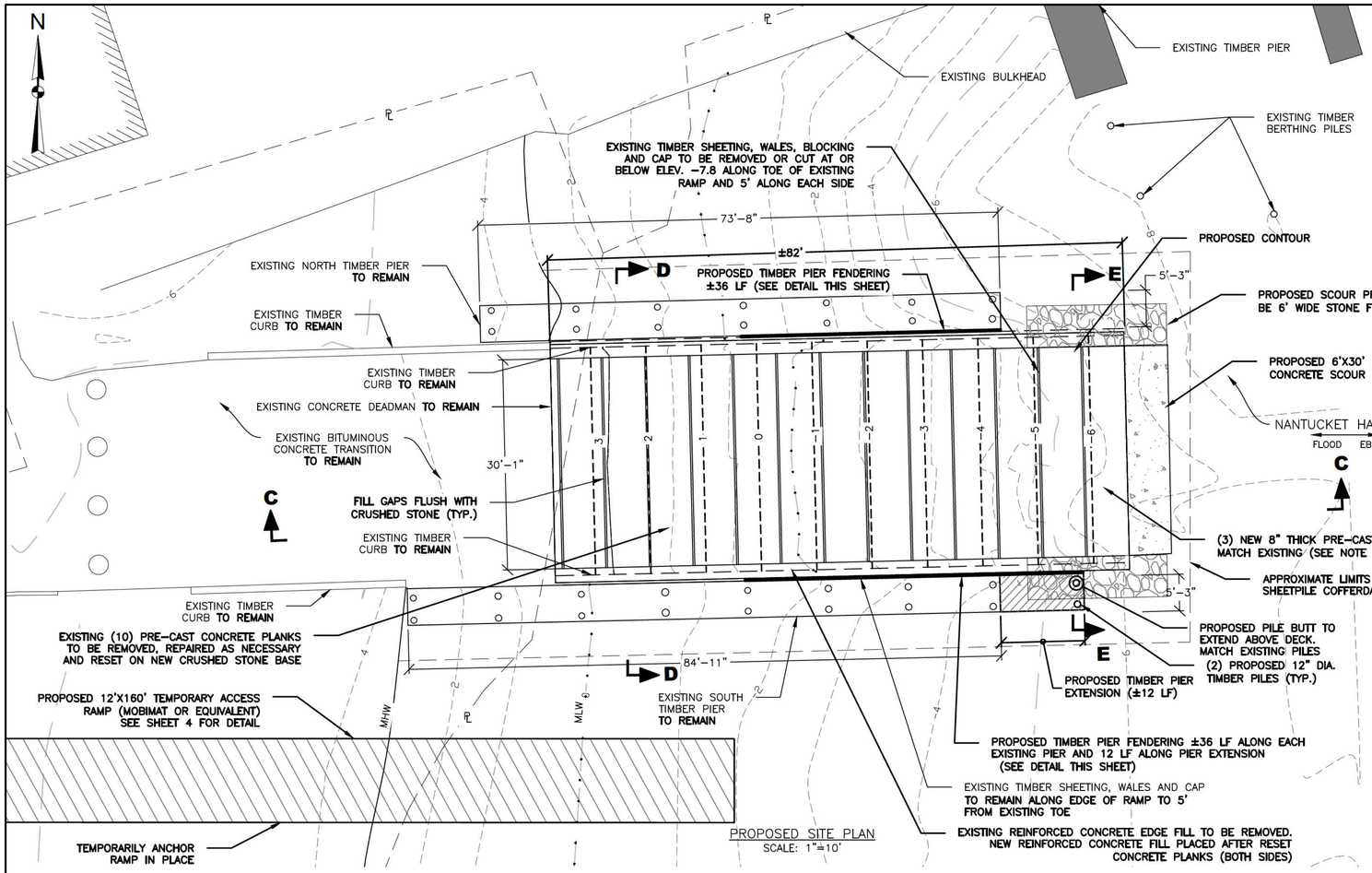

PROPOSED SITE PLAN
SCALE: 1"=10'

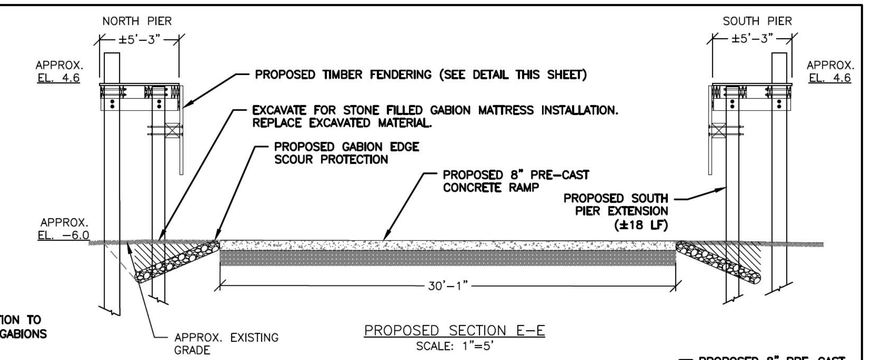

PROPOSED SECTION E−E
SCALE: 1"=5'

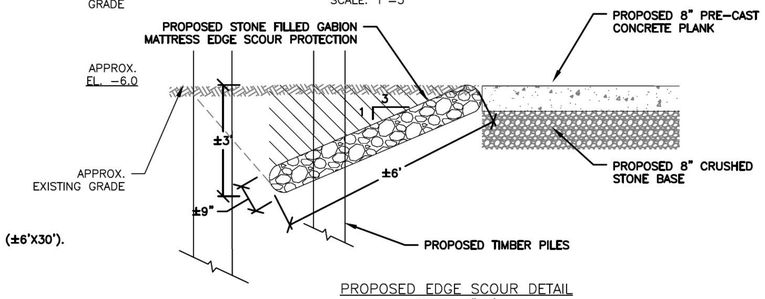

PROPOSED EDGE SCOUR DETAIL
SCALE: 1"=2'

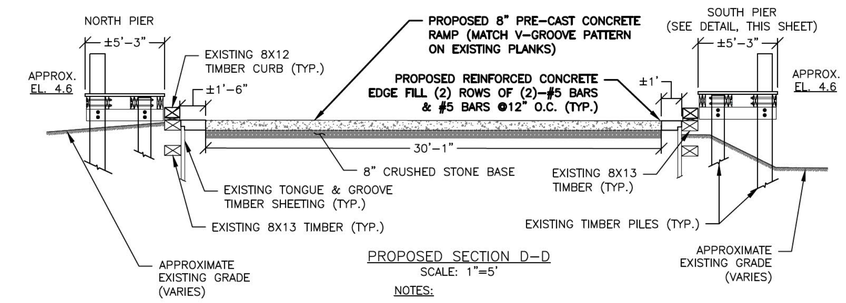

PROPOSED SECTION D−D
SCALE: 1"=5'

NOTES:

1. EXISTING CONCRETE PLANKS TO BE REMOVED, REPAIRED AS NECESSARY, STOCK PILED AND RESET TO LINES AND GRADES SHOWN ON DRAWINGS. NEW RAMP LAYOUT TO INCLUDE EXISTING SALVAGED PLANKS AND (3) 6'X30' SUPPLEMENTAL PLANKS. PLACEMENT LOCATION OF RESET AND SUPPLEMENTAL PLANKS TO BE DETERMINED BY THE ENGINEER.
2. TIMBER PIER IMPROVEMENTS INCLUDE INSTALLATION OF CCA TREATED SYP. TIMBER WALE, LAGGING AND BLOCKING TO EXISTING TIMBER PIERS (±36 LF EACH PIER) AND SOUTH PIER EXTENSION (±12 LF).
3. FOR BIDDING PURPOSES, ASSUME 10 STAINLESS STEEL PRE−CAST PLANK CONNECTION REPAIRS.
4. TIMBER FENDERING ALONG EXISTING TIMBER PIER SHALL BE THRU−BOLTED TO STRINGER MEMBERS AT LOCATIONS WHERE BLOCKING IS NOT PRESENT (BETWEEN BENTS) AND LAG BOLTED AT BENT LOCATIONS WITH BLOCKING. TIMBER FENDERING ALONG PIER EXTENSION SHALL BE THRU−BOLTED WITH ADDITIONAL BLOCKING AT PILE LOCATIONS AND THRU−BOLTED TO STRINGER MEMBERS IN BETWEEN BENTS.
5. BOTTOM OF LAGGING ELEVATION FOR TIMBER FENDERING SHALL BE ADJUST TO AVOID IMPACT WITH BOAT RAMP TIMBER CURB, AS NECESSARY.

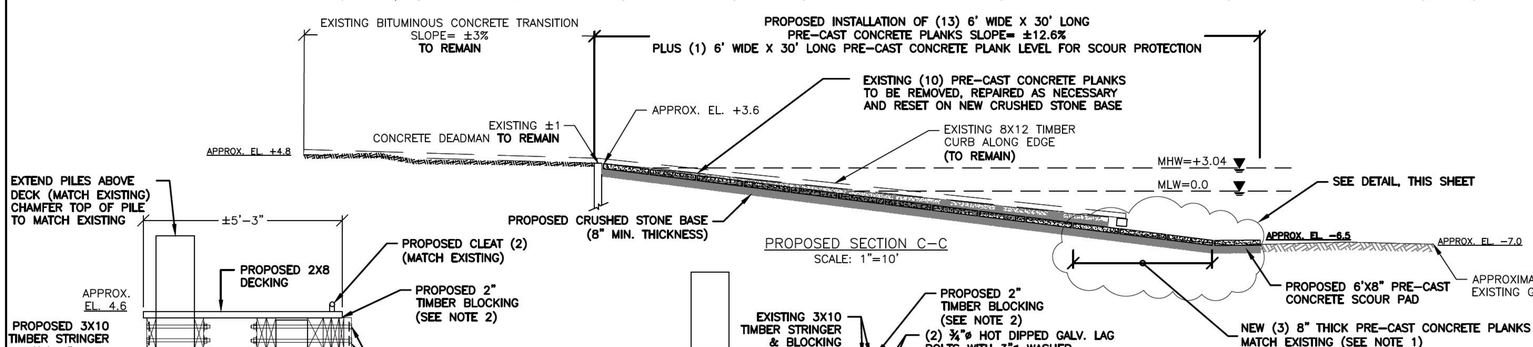

PROPOSED SECTION C−C
SCALE: 1"=10'

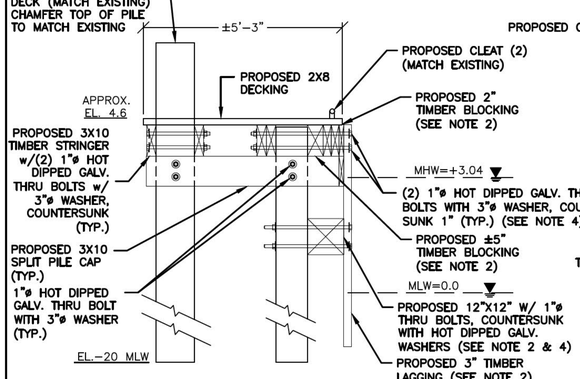

PROPOSED TIMBER PIER DETAIL
SCALE: 1"=2'

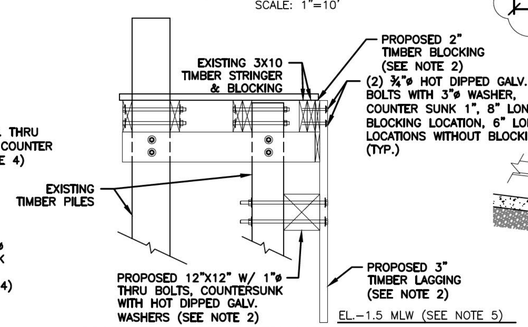

PROPOSED TIMBER FENDERING DETAIL
SCALE: 1"=2'

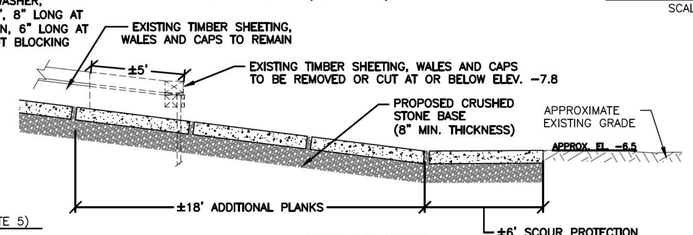

PROPOSED DETAIL
SCALE: 1"=4'

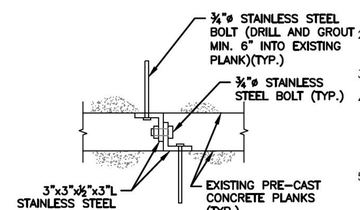

STAINLESS STEEL PRE−CAST PLANK CONNECTION REPAIR DETAIL
SCALE: N.T.S.

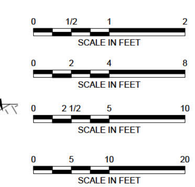

ISSUED FOR BIDDING — NOVEMBER 2016

UNLESS SPECIFICALLY STATED BY WRITTEN AGREEMENT, THIS DRAWING IS THE SOLE PROPERTY OF GZA GEOENVIRONMENTAL, INC. (GZA). THE INFORMATION SHOWN ON THE DRAWING IS SOLELY FOR USE BY GZA'S CLIENT OR THE CLIENT'S DESIGNATED REPRESENTATIVE FOR THE SPECIFIC PROJECT AND LOCATION IDENTIFIED ON THE DRAWING. THE DRAWING SHALL NOT BE TRANSFERRED, REUSED, COPIED, OR ALTERED IN ANY MANNER FOR USE AT ANY OTHER LOCATION OR FOR ANY OTHER PURPOSE WITHOUT THE PRIOR WRITTEN CONSENT OF GZA. ANY TRANSFER, REUSE, OR MODIFICATION TO THE DRAWING BY THE CLIENT OR OTHERS, WITHOUT THE PRIOR WRITTEN EXPRESS CONSENT OF GZA, WILL BE AT THE USER'S SOLE RISK AND WITHOUT ANY RISK OR LIABILITY TO GZA.

CHILDREN'S BEACH BOAT RAMP IMPROVEMENT PROJECT
15 HARBOR VIEW WAY
NANTUCKET, MA

PROPOSED IMPROVEMENTS

PREPARED BY:
GZA GeoEnvironmental, Inc.
Engineers and Scientists
www.gza.com

PREPARED FOR:
TOWN OF NANTUCKET
4 FAIRGROUNDS ROAD
NANTUCKET, MA 02554

PROJ MGR: DAS	REVIEWED BY:	CHECKED BY:	FIGURE
DESIGNED BY: DAS	DRAWN BY: RKT	SCALE: AS NOTED	5
DATE: NOVEMBER 2016	PROJECT NO. 18.0172082.00	REVISION NO. 1 9/1/2015	SHEET NO. 5 OF 5

© 2016 – GZA GeoEnvironmental, Inc. GZA–J:\172000's\18.0172082.00 Nantucket Three Projects – Dredging, Floats, Ramp\Figures–CAD\03_Children's Beach Ramp\Children's Beach Boat Ramp– November 2016.dwg [SHEET 4– PROPOSED IMPROVEMENTS] October 21, 2016 – 1:34pm joshua.zall