FINAL

LAND USE CONTROL AND LONG-TERM MANAGEMENT IMPLEMENTATION PLAN
FOR
NANTUCKET BEACH FORMERLY USED DEFENSE SITE
PROJECT NO. D01MA045601
NANTUCKET ISLAND, MASSACHUSETTS

Contract No W912DR-15-D-0015, Delivery Order 0003

Prepared for:

USACE Corps of Engineers

New England District

Prepared by:

ERT, Inc.
14401 Sweitzer Lane, Suite 300
Laurel, Maryland 20707
(301) 361-0620

July 2018

This Page Intentionally Left Blank

Final

Land Use Control and Long-Term Management Implementation Plan for
Nantucket Beach Formerly Used Defense Site
Project No. D01MA045601
Nantucket Island, Massachusetts

Prepared for:

U.S. Army Corps of Engineers
New England District

W912DR-15-D-0015
Delivery Order 0003

Prepared by:

Approvers:

Jennifer Harlan, PMP Date: 4/3/2018
Project Manager

COMPLETION OF SENIOR TECHNICAL REVIEW

This document has been produced within the framework of the ERT, Inc. (ERT) quality management system. As such, a senior technical review has been conducted. This included review of all elements addressed within the document, proposed or utilized technologies and alternatives and their applications with respect to project objectives and framework of U.S. Army Corps of Engineers regulatory constraints under the current project, within which this work has been completed.

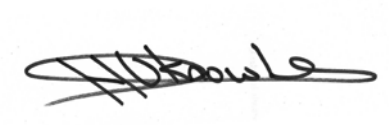

Yorky Knowles Date: 4/3/2018
Senior Technical Reviewer

COMPLETION OF INDEPENDENT TECHNICAL REVIEW

This document has been produced within the framework of ERT, Inc. total quality management system. As such, an independent technical review, appropriate to the level of risk and complexity inherent in the project, has been conducted. This included review of assumptions (methods, procedures, and material used in analyses), alternatives evaluated; the appropriateness of data used and level of data obtained; and reasonableness of the results, including whether the product meets the project objectives. Comments and concerns resulting from review of the document have been addressed and corrected as necessary.

Thomas Bachovchin, P.G. Date: 4/3/2018
Independent Technical Reviewer

TABLE OF CONTENTS

1.0 INTRODUCTION 1
1.1 Purpose and Scope 1
1.2 Definition of Land Use Controls 1
1.3 Former Nantucket Ordnance Site 2
1.4 Land Use 2
1.5 Selected Remedy 3
2.0 LUCs for Aerial Rocket Range Target #1 MRS 4
2.1 LUC Performance Objectives 4
2.2 LUC Components 4
3.0 Implementation Process 5
3.1 Explosives Safety Educational Materials 5
3.2 LUC Signs 6
3.3 3Rs Explosive Safety Education Program 8
3.4 Long-Term Management 9
4.0 Roles and Responsibilities 10
4.1 Responsibilities 10
4.2 Applicability 10
4.3 Integration with the Nantucket Beach FUDS Community 10
4.4 Description of LUC Implementation Activities 10
4.4.1 Summary of Activities, Deliverables, and Project Schedule 11
4.5 LUC Enforcement 11
5.0 Five-Year Review 12
6.0 REFERENCES 13

LIST OF TABLES

Table 3-1. Distribution Recipients 5
Table 3-2. Sign Location Coordinates 8
Table 4-1. Activities, Deliverables, and Project Schedule 11

LIST OF ATTACHMENTS

Attachment A Figures
Attachment B Institutional Analysis
Attachment C Draft Nantucket Beach Formerly Used Defense Site, Potential Munitions in Soil Handling/Management Guidance
Attachment D Tri-fold Brochure
Attachment E Nantucket FUDS Sign Specifications
Attachment F LUC Inspection Checklist

LIST OF ACRONYMS AND ABBREVIATIONS

CENAE	USACE New England District
DD	Decision Document
DMM	Discarded Military Munitions
DoD	Department of Defense
DVD	Digital Video Disc
EM	Engineering Manual
FUDS	Formerly Used Defense Site
IC	Institutional Control
LTM	Long-term Management
LUC	Land Use Control
LUCIP	Land Use Control Implementation Plan
MADEP	Massachusetts Department of Environmental Protection
MD	Munitions Debris
MEC	Munitions and Explosives of Concern
MRS	Munitions Response Site
NCF	Nantucket Conservation Foundation
NCP	National Contingency Plan
RAO	Remedial Action Objective
RI	Remedial Investigation
USACE	U.S. Army Corps of Engineers
UXO	Unexploded Ordnance

This Page Intentionally Left Blank

1.0 INTRODUCTION

This Land Use Control Implementation Plan (LUCIP) details the approach for implementing land use controls (LUCs) at the Former Nantucket Ordnance Site to address the Aerial Rocket Range Target #1 Munitions Response Site (MRS) (Figure 1). This LUCIP is prepared in accordance with the *Final Decision Document (DD) Nantucket Beach, Former Nantucket Ordnance Site A.K.A. Tom Nevers Rocket Projectile Target; Tom Nevers Area Formerly Used Defense Site Project Number D01MA045601 and D01MA45602, Aerial Rocket Range Target #1 Munitions Response Site, Aerial Rocket Range Fan Munitions Response Site, Nantucket, Massachusetts* (US Army Corps of Engineers [USACE] 2015). The accepted remedy for the Aerial Rocket Range Target #1 MRS is LUCs and Long-term Management (LTM). LUCs will consist of the installation and maintenance of signs to ensure the safety of landowners, workers, and the public. In addition, informational materials associated with the 3Rs: Recognize, Retreat and Report, will be developed and distributed to stakeholders and military munitions educational awareness training will be provided.

This LUCIP is also prepared in accordance with the following guidance:

- Defense Environmental Restoration Program (DERP) Management Manual 4715.20 (DoD, 2012),
- Department of Defense (DoD) Policy on Land Use Controls Associated with Environmental Restoration Activities (DoD, 2001)
- EP 1110-1-24, *Establishing and Maintaining Institutional Controls for Ordnance and Explosives (OE) Projects* (USACE, 2007),
- ER 200-3-1 and Errata, *Environmental Quality, Formerly Used Defense Sites (FUDS) Program Policy* (USACE, 2004),

1.1 Purpose and Scope

The purpose of this LUCIP is to detail the components of the LUCs per the Final DD for the Aerial Rocket Range Target #1 MRS (USACE, 2015), describe the LUC implementation process, and outline procedures for LUC oversight.

1.2 Definition of Land Use Controls

The term “land use control” means any restriction or administrative action, including engineering and institutional controls, arising from the need to reduce risk to human health and the environment.

The Department of Defense (DoD) further clarifies the meaning of land use controls as follows:

> *Any type of physical, legal, or administrative mechanism that restricts the use of or limits access to real property to prevent or reduce risks to human health and the environment. Physical mechanisms encompass a variety of engineered remedies to contain or reduce contamination and physical barriers to limit access to property, such as fences or signs. The legal mechanisms used for LUCs are generally the same as those used for institutional controls as discussed in National Contingency Plan (NCP). Legal mechanisms include restrictive covenants, negative easements, equitable servitudes, and deed notices. Administrative mechanisms include notices,*

adopted local land use plans and ordinances, construction permitting, or other land use management systems to ensure compliance with use restrictions (DoD, 2012).

1.3 Former Nantucket Ordnance Site

The Former Nantucket Ordnance Site (Formerly Used Defense Site [FUDS] a.k.a. Tom Nevers Rocket Projectile Target; Tom Nevers Area, FUDS), will be referred to as the Nantucket Beach FUDS. The Nantucket Beach FUDS is located on Nantucket Island in Nantucket, Massachusetts. The U.S. Government leased the Nantucket Beach FUDS between September 1943 and 30 June 1946 and the military used the Nantucket Beach FUDS as a practice aerial rocket range. Training ceased on 1 September 1945. This was one of three ranges on Nantucket used by the Navy pilots out of the Quonset Naval Air Station for training purposes. The Aerial Rocket Range and a potential 1.5-acre burial pit area located within the range were first identified via the Archives Search Report prepared by USACE in September 1997. Since that time, multiple investigations to identify historical uses and potential residual impacts have been conducted including research of records, anecdotal information collection, a Site Inspection conducted in 2010, and a Remedial Investigation (RI) conducted in 2012 (Weston, 2013).

The RI divided the Nantucket FUDS into two MRSs, the Aerial Rocket Range Target #1 MRS and the Aerial Rocket Range Fan (Weston, 2013). The Aerial Rocket Range Target #1 MRS is approximately 97 acres and includes the delineated impact area around former Target #1 where munition debris (MD) was identified during the RI. This MRS also includes a 1.5-acre area suspected burial pit; however; the RI found no evidence for a burial pit. All MD found during the RI were later classified as material documented as safe. Historically, military munitions have been encountered and responded to during munitions emergency responses. Although no munitions and explosives of concern (MEC) were found during the RI, based on the extent of MD recovered, and the fact that EOD claims they have responded to and detonated high explosive munition items, the RI determined that there is a low statistical potential for MEC to be present. No munitions constituents were found to be a risk to human health or the environment. Therefore, MEC is the only potential source that requires a remedial action.

The Aerial Rocket Range Fan MRS is approximately 5,060 acres of remaining land and coastal water area. This MRS includes the suspect Target #2 and Target #3 that were located within the associated range fan. During the 2012 RI, no unexploded ordnance, discarded military munitions, or MD were encountered within the Aerial Rocket Range Fan MRS. Additionally, the baseline risk assessment concluded that there were no explosive or environmental hazards present within this MRS. The DD recommended this site for No Further Action; therefore, this MRS is not included in this LUCIP.

1.4 Land Use

All land within the MRS boundary is privately-owned and used for residential or conservation purposes with recreational access permitted within the non-residential properties. This includes portions of the beach along the southern boundary of the MRS. Based on the current property lines, there are five residential property owners in addition to the Nantucket Conservation Foundation (NCF) that currently own property within the Aerial Rocket Range Target #1 MRS boundary (Figure 2). The USACE performed an institutional analysis for the Nantucket Beach FUDS to document which stakeholders have authority over the Aerial Rocket Range Target #1 MRS. The institutional analysis is provided in Attachment B. The future land use is expected to remain residential and recreational beach.

1.5 Selected Remedy

The DD states that the selected remedy is:

The Selected Remedy for the Aerial Rocket Range Target #1 MRS is Land Use Controls (LUCs) and Long-term Management (LTM). Under the Selected Remedy, potential exposure hazards to the public will be managed through public awareness. Specific LUC components of the Selected Remedy includes three forms of public informational materials for education:

- *Development and annual distribution of 3Rs (Recognize, Retreat, Report) explosives safety educational materials (e.g., brochures, fact sheets,) and other information packages to provide awareness to property owners [e.g., residents, the Nantucket Conservation Foundation (NCF)], local responders, and Town officials of the potential presence of military munitions and the actions to take should they encounter or suspect they have encountered a military munition. Information is to be distributed annually for the first 5 years prior to the 5-year review period. After the first 5 years, USACE will make a determination on the frequency of future LUCs. The proposed determination will be provided to Massachusetts Department of Environmental Protection for review and comment.*
- *Installation and maintenance of signage at strategic access points in the MRS to alert users of the site's history and potential to encounter military munitions. Signage is provided for the general public accessing the MRS for recreational or other purposes. Implementation of a targeted 3Rs Explosives Safety Education Program that is focused on the property owners (e.g., residents, the NCF), local responders, and Town officials. This would provide 3Rs explosives safety education material (e.g., videos, brochures, and fact sheets), training, and other information to provide awareness and to advise people of actions to take should a munition be encountered.*
- *Further details on LUCS and Soil Management Guidance will be provided in the Land Use Control Implementation Plan.*

2.0 LUCS FOR AERIAL ROCKET RANGE TARGET #1 MRS

2.1 LUC Performance Objectives

The remedial action objective (RAO) established for the Nantucket Beach FUDS is to reduce the probability that residents, recreational users, visitors, and workers from moving, disturbing, or handling munitions encountered during residential, construction, maintenance, or recreational activities performed on the ground surface or that include ground disturbing or intrusive activities at the MRS. The selected remedy will meet the RAO, with risk managed using LUCs that will provide public awareness of the potential for MEC.

2.2 LUC Components

The following are the specific LUC components of the selected remedy:

- Development and distribution of 3Rs (Recognize, Retreat, Report) explosives safety educational materials (e.g., brochures, fact sheets) to property owners, local responders, and Town officials.
- Installation and maintenance of signage at strategic access points in the MRS to alert users of the site's history and potential to encounter military munitions.
- Implementation of a targeted 3Rs Explosive Safety Education Program that is focused on the property owners, local responders, and Town officials.

Based on the comments received during review of the Proposed Plan by the community and State regulators, an initial Soil Handling/Management Guidance document was also developed (Attachment C). This document provides information to property owners and others involved in soil handling activities within the MRS that might include but are not limited to: soil excavation for construction, gardening, landscaping, vegetation clearing/grubbing, and stump grinding and removal.

In accordance with the DD, additional information regarding the Nantucket Beach FUDS can be found at http://www.nae.usace.army.mil/Missions/Projects-Topics/Nantucket-Beach.

3.0 IMPLEMENTATION PROCESS

3.1 Explosives Safety Educational Materials

The explosives safety educational materials will use the DoD's Explosive Safety Education Program that educates the public to "Recognize, Retreat and Report" (the 3Rs) when encountering suspected munitions. The Army designed the national program as a toolkit from which individual tools can be used to enhance or supplement site specific programs. The USACE, or its designee, will arrange to have a tri-fold brochure or single page fact sheet distributed to all property owners (NCF and private residents), local authorities, and Town officials (Table 3-1) on an annual basis. The tri-fold brochure is included in Attachment D. Included with this distribution will be the Soil Handling/Management Guidance document.

Table 3-1. Distribution Recipients

Name	Point of Contact	Contact Information	Parcel IDs
Nantucket Conservation Foundation	Jim Lentowski - Executive Director Tom Lennon - Director of Finance & Administration	PO Box 13, Nantucket, MA 02554 Office address: 118 Cliff Road Tel: (508) 228-2884 Fax: (508) 228-5528 jlentowski@nantucketconservation.org tlennon@nantucketconservation.org	77 29, 77 2, 76 1, 91 2.2
Nantucket Land Bank Commission	Eric Savetsky	22 Broad Street Nantucket, Massachusetts 02554 Tel: (508) 228-7240 Fax: (508) 228-9369 Web: www.nantucketlandbank.org	NA
Nantucket Town Manager and Assistant Town Manager	C. Elizabeth Gibson – Town Manager Gregg Tivnan – Assistant Town Manager	Town Building16 Broad Street, 1st Floor Nantucket, Massachusetts 02554 Tel: (508) 228-7255 – Town Manager Tel: (508) 228-7254 – Asst. Manager Fax: (508) 228-7272 Town Manager: LGibson@nantucket-ma.gov Assistant Town Manager: gtivnan@nantucket-ma.gov	NA
Nantucket Police Department	Sheila Lucey – Harbormaster	34 Washington Street Nantucket, Massachusetts 02554 Tel: (508) 325-4100 ext. 5031 slucey@police.nantucket-ma.gov	NA
Nantucket Memorial Airport	Jeff Marks - Airport Manager/Airfield Supervisor	14 Airport Road Nantucket, MA 02554 Tel: (508)325-5300 Fax: (508) 325-5306	NA

Table 3-1. Distribution Recipients			
Name	**Point of Contact**	**Contact Information**	**Parcel IDs**
	Noah Karberg - Environmental Coordinator	Tel: (508) 325-7531 nkarberg@nantucketairport.com	
Nantucket Parks and Recreation	James P. Manchester - Director	188 Madaket Road Nantucket, Massachusetts 02554 Tel: (508) 228-7244 Fax: (508) 228-7289 jmanches@nantucket-ma.gov	NA
Massachusetts State Police	Sergeant John "Jack" Moran	Station d-6, SP Nantucket 83 North Liberty Street Nantucket, Massachusetts 02554 Tel: (508) 228-0706	NA
Nantucket Fire Department	Steve Murphy - Fire Chief	131 Pleasant Street Nantucket, MA 02554 Tel: (508) 228-2323 Fax: (508) 325-7500	NA
Nantucket Police Department	William Pittman - Police Chief Charles Gibson - Deputy Chief	4 Fairgrounds Road Nantucket, Massachusetts 02554 Tel: (508) 228-1212 Fax: (508) 228-7246	NA
Private Property Owners	Current Landowner*	PO Box 13, Nantucket, MA 02554 Office address: 118 Cliff Road	77 3.1
	Current Landowner*	30 East 10th Street, Apartment 12 New York, New York 10003	90 9
	Current Landowner*	P.O. Box 5117 Nantucket, Massachusetts 02554	91 1
	Current Landowner*	P.O. Box 2322 Nantucket, Massachusetts 02584	91 118
	Current Landowner*	200 Market Ave North, Ste 210 Canton, OH 44702	91 119
	Current Landowner*	P.O. Box 298 Mendham, New Jersey 07945	91 2.4

NA – not applicable

* Current Landowner per Town property records (GIS data website: https://nantucketma.mapgeo.io)

3.2 LUC Signs

Six (6) munitions awareness signs are currently installed at the Nantucket Beach FUDS as shown on Figure 3, as part of an interim action conducted during the investigation phases. Sign location coordinates are shown in Table 3-2 and on Figure 3. The language of the signs is as follows:

Former Nantucket Beach Rocket Range

World War II Military Ordnance Has Been Found

The Formerly Used Defense Site (FUDS), "Nantucket Beach", covers approximately one mile of beach and upland areas, starting at the former Tom Nevers Naval Facility (the present site of the baseball fields) and heading west and north. The U.S. Navy conducted air-to-ground military training exercises at the former "Nantucket Beach" range during WWII.

Rocket motor bodies have been found in this area varying in size from 2.25 inches to 5 inches in diameter. Some rocket motor bodies have been found with inert practice warheads. Military munitions may contain energetic material and are potentially dangerous.

IF YOU SEE AN ITEM THAT IS A SUSPECTED MUNITION:
- RECOGNIZE – identify the item as potentially dangerous;
- RETREAT – leave the area immediately WITHOUT TOUCHING the item;
- REPORT the incident by calling 911 with the location of the item(s).

DO NOT TOUCH! Call 911 immediately

For more information please call the U.S. Army Corps of Engineers,

New England District, 978-318-8264

Table 3-2. Sign Location Coordinates			
Location	**Type**	**Latitude**	**Longitude**
Tom Nevers Ball Field	Pedestrian	41° 14' 23.52	70 ° 00 ' 28.06
Land Band Commission Property	Pedestrian	41° 14' 23.38	70 ° 00 ' 33.30
East Forked Pond Valley	Pedestrian	41° 14' 27.33	70 ° 01 ' 28.52
West Forked Pond Valley	Pedestrian	41° 14' 27.95	70 ° 01 ' 39.41
New South Rd	Pedestrian	41° 14' 31.160	70° 02' 06.174
Russell Way Rd	Pedestrian	41° 14' 32.48	70 ° 02 ' 11 .40

Signs posted at Nantucket Beach are provided in the Nantucket FUDS Sign Specifications (Attachment E).

These signs have proven effective in educating the public about the potential hazards associated with historical DoD usage of the Nantucket Beach FUDS. For the signs to continue to be effective, they must be inspected annually and maintained as necessary; these inspections will be conducted by USACE as part of the LTM. During the inspections, signs will be cleaned, as needed, and conditions will be documented and photographed. An inspection report will be prepared that documents the existing condition of the signs, inspection activities performed, and suggested future activities (critical and routine); the inspection report will include before inspection and after cleanup photographs of each sign. Additional inspections may be necessary after significant storm events. USACE will inform stakeholders when additional (more than annual) inspections are required.

Currently installed signs will remain in place until inspections indicate the need for replacement. If during the annual (and as needed) site inspection events, it is determined that signs and/or the frames are damaged, USACE will repaired/replaced the damaged signs using the same specifications/materials as the original signs. Sign specifications and locations are provided in Attachment E. All work associated with repair/replacement of the signs will be conducted in full compliance with USACE, Department of the Army policy and regulations, including Engineering Manual (EM) 385-1-1, and DoD safety regulations. All work will be conducted in accordance with anomaly avoidance procedures.

3.3 3Rs Explosive Safety Education Program

Annual training to civil authorities (local police and fire department personnel) and NCF personnel will be provided by USACE. USACE will send notification of the annual training to everyone listed in Table 3.1. A highly-qualified Department of Defense Explosives Safety Board-approved Unexploded Ordnance Technician III will conduct the training. Training will, at a minimum, focus on the identification of potential ordnance and actions to be taken in accordance with the Army 3Rs. Training will incorporate the 3Rs logo and slogans and will include training materials from https://www.denix.osd.mil/portal/page/portal/denix/environment/uxo.

The USACE will approve all developed training materials. Training will be coordinated with the local police and fire authorities and provided at a location near the site (to be determined annually based on availability). The training provided for each participant in the onsite training

sessions will be documented in an attendee list that will be included as part of the annual and five-year reports. Documentation will include the name and date of training, in addition to everyone's printed name, organization, email, phone number and signature. The first training session will be a live, in person training session. Subsequent training sessions may or may not be live or in person and may be via recorded video. The decision regarding live in person versus video training will be made by the New England District Corps of Engineers in consultation with the Town of Nantucket and the Nantucket Conservation Commission, the primary recipients of the training.

3.4 Long-Term Management

USACE will provide LTM of the LUCs by performing a review of site conditions in addition to the sign maintenance activities outlined in Section 3.2. The review of site conditions will include in person or telephone interviews with residents, EOD, local police, and the Massachusetts Bomb Squad during each annual sign inspection process and the interview results will be included in the inspection reports and 5-year Review Reports. The annual inspection reports will include a summary of the current conditions of the site, the sign inspection activities and results, interview results, EOD response action and reports (if any), and a summary of any intrusive activities conducted since the previous inspection. The annual reports will be included as an attachment to the 5-Year Review Report.

During the annual sign inspections, the nearby beach areas will be visually inspected to determine if any munition items are visible. If so, the contractor providing inspection services will follow the same 3Rs procedures as residents/visitors and will call 911 to report the item. Any munitions items found during the annual site inspections will be documented in the annual report and the 5-Year Review Report.

4.0 ROLES AND RESPONSIBILITIES

4.1 Responsibilities

The USACE or its designee is responsible for implementing the LUCs described in this plan. Although the government does not own the property, the USACE is ultimately responsible for Five-Year Reviews ensuring the protectiveness of the selected remedy. The point of contact for additional brochures, sign repair, and other LUCIP issues, will be the USACE New England District (CENAE). Changes to the responsibility for LUCIP will be coordinated with MADEP and landowners.

4.2 Applicability

The LUCs will be implemented within the Aerial Rocket Range Target #1 MRS. As a practical consideration, the LUCs, including education and awareness activities, will be applied to all areas of the Nantucket Beach FUDS (outside of the MRS boundary) to address the possibility that MEC might have been relocated or found there. This serves as a conservative measure to ensure the entire community is educated about munitions issues even though USACE does not propose active response actions beyond the MRS boundary. Explosives safety educational materials will be implemented as described in Section 3.1. UXO warning signs have been implemented as described in Section 3.2. Educational awareness training will be provided as described in Section 3.3.

4.3 Integration with the Nantucket Beach FUDS Community

The notice and educational nature of the LUCs can be easily integrated into the future operating practices of the property in a manner that will enhance the remedy's effectiveness. For example, the USACE has developed soil handling guidance to provide information to property owners and others involved in the handling of munitions potentially found in soil to assist in reducing any hazard to human health and safety and the environment due to potential remaining munitions. The Army will offer educational materials to the stakeholders. The stakeholders may in turn make those materials available to others. USACE will coordinate with property owners, the Nantucket Conservation Foundation, Local Police, EOD, and the Massachusetts State Bomb Squad for any emergency responses conducted by them within each year of the LUC/LTM. The state or local authorities such as the MADEP are invited to comment upon remedy implementation and performance during 5-Year Reviews.

4.4 Description of LUC Implementation Activities

Three major activities are required to implement LUCs for the Nantucket Beach FUDS: inspection and maintenance of existing signs, developing and distributing 3Rs materials, and conducting educational awareness training. USACE will coordinate with property owners, the Nantucket Conservation Foundation, Local Police, EOD, and the Massachusetts State Bomb Squad for any emergency responses conducted by them within each year of the LUC/LTM.

The LUC signs have been installed. Inspection and maintenance of the signs will be conducted annually, and on an as needed basis. An inspection report that includes documentation of site conditions and inspection activities will be submitted as shown in Table 4-1. A sample LUC inspection checklist is provided in Attachment F. During sign inspection activities, the nearby beach area will be visually inspected to determine if any munition items are visible. If so, the contractor providing inspection services will follow the same 3Rs procedures as residents/visitors and will call 911 to report the item.

Educational awareness training for the Nantucket Beach FUDS will be conducted annually. Awareness of potential MEC hazards and response procedures will be coordinated with local entities (i.e., NCF and civil authorities).

4.4.1 Summary of Activities, Deliverables, and Project Schedule

The Table 4-1 summarizes the activities, reporting, project schedule associated with the LUCIP and LTM for the Aerial Rocket Range Target #1 MRS.

Table 4-1. Activities, Deliverables, and Project Schedule

Activity	Schedule	Deliverable/Due Date	Recipients
Sign Inspection and UXO Awareness Training			
Sign Inspection and Maintenance Site Visit with Inspection Report	Annually beginning June 2017	Annual Letter Report/7 days after completion of field activities	USACE and MassDEP*
UXO Educational Awareness Training Presentation	Annually beginning June 2017	Annual Letter Report/7 days after completion of educational training activities	USACE and MassDEP*
Five-Year Review			
Five-Year Review	Report Due December 2020	Five-Year Review Report/December 2020	USACE and MassDEP*

* To be provided to MassDEP for review and comment upon completion of USACE review.

4.5 LUC Enforcement

The USACE is responsible for maintaining and reporting on the LUCs. The USACE has transferred these procedural responsibilities to another party by contract. Overall, the USACE retains ultimate responsibility for remedy integrity.

5.0 FIVE-YEAR REVIEW

Per the Comprehensive Environmental Response, Compensation, and Liability Act, a Five-Year Review is required to assess the effectiveness of the LUCs and remedial activities at the Nantucket Beach FUDS and to document site conditions when unlimited use/unlimited exposure has not been met. The USACE or its designee will conduct the Five-Year Reviews in accordance with CERCLA guidance applicable at the time of the review. The reviews may include a review of records (e.g., preliminary site assessments, work plans, investigation reports, the decision document, remedial action reports, annual reports, and sign inspection documents), research into and identification of potential new information to review and confirm that current site conditions have not changed from historical site conditions. The 5-year review report will include the annual site inspection and sign maintenance reports for the 5-year period covered by the 5-year review. The continued integrity of the LUCs will be evaluated and additional recommendations regarding LUCs will be made, if appropriate.

6.0 REFERENCES

Department of Defense (DoD). 2001. *Policy on Land Use Controls Associated with Environmental Restoration Activities.* 17 January.

DoD. 2012. *4715.20 Defense Environmental Restoration Program (DERP) Management*. 9 March.

U.S. Army Corps of Engineers (USACE). 2004. *ER 200-3-1 and Errata, Environmental Quality, Formerly Used Defense Sites (FUDS) Program Policy.* 10 May.

USACE. 2007. *EP 1110-1-24 Establishing and Maintaining Institutional Controls for Ordnance and Explosives (OE) Projects.* 4 December.

USACE. 2015. *Final Decision Document (DD) Nantucket Beach, Former Nantucket Ordnance Site A.K.A. Tom Nevers Rocket Projectile Target; Tom Nevers Area Formerly Used Defense Site Project Number D01MA045601 and D01MA45602, Aerial Rocket Range Target #1 Munitions Response Site, Aerial Rocket Range Fan Munitions Response Site, Nantucket, Massachusetts*. December.

Weston Solutions, Inc. (Weston). 2013. *Final Remedial Investigation Report for the Nantucket Beach, Former Nantucket Ordnance Site A.K.A. Tom Nevers Rocket Projectile Target; Tom Nevers Area, Formerly Used Defense Site, Prepared for the U.S. Army Corps of Engineers (USACE), Baltimore District, Baltimore, Maryland*. 26 November.

ATTACHMENT A

FIGURES

List of Figures

Figure 1 Site Location
Figure 2 NCF Property
Figure 3 Sign Locations

US Army Corps of Engineers
BUILDING STRONG.

ERT

Legend

Aerial Rocket Range Target #1 MRS

Aerial Rocket Range Fan MRS

Formerly Used Defense Site (FUDS) Boundary

N
W E
S

0 4,000
Feet

Data sources: ESRI Online, USACE

Figure 1
Site Location
LUCIP
Nantucket Beach FUDS
Nantucket, Massachusetts

N:\GIS\Northeast\Massachusetts\Nantucket\MXD\SiteLocation.mxd

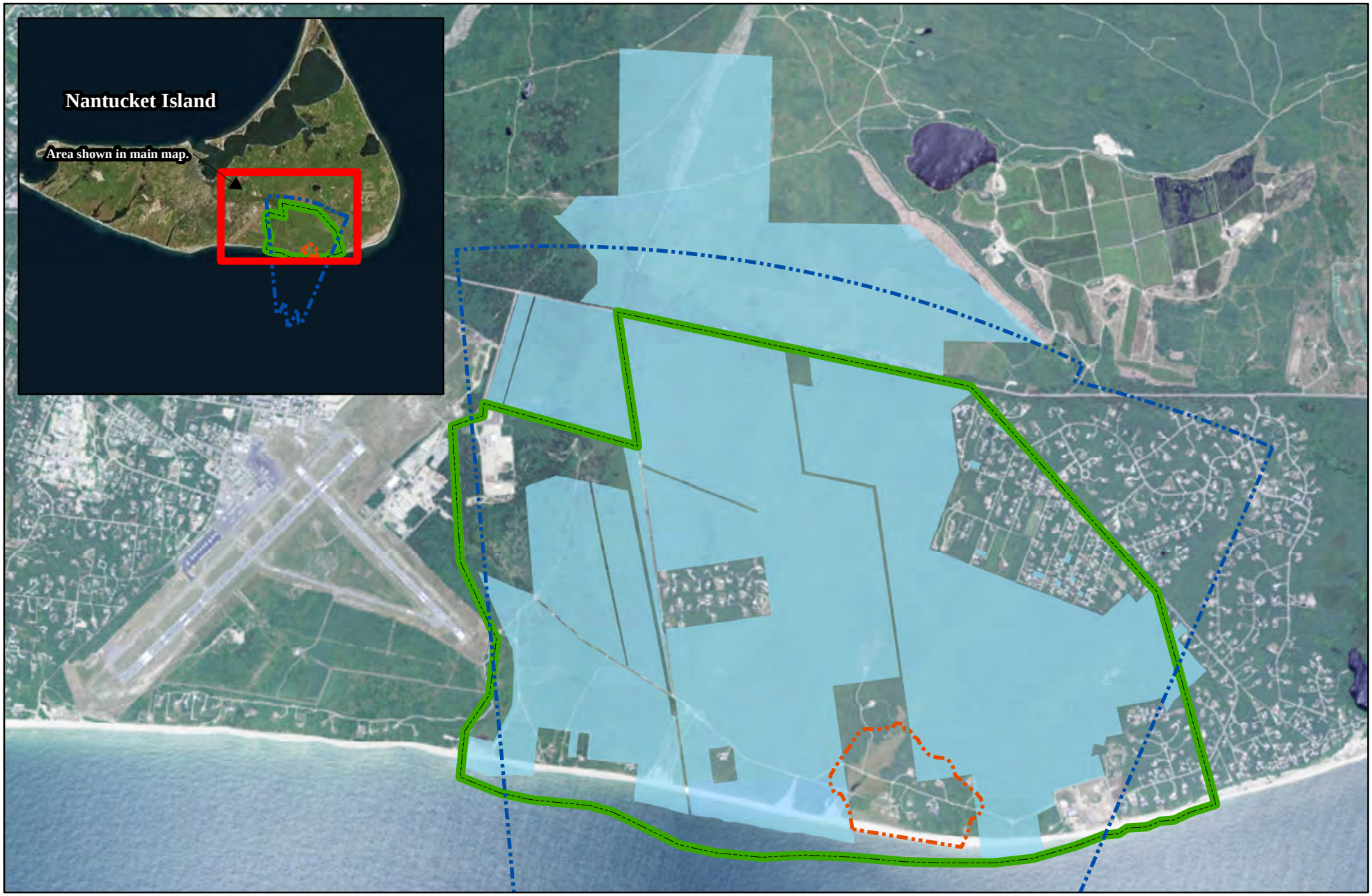

US Army Corps of Engineers
BUILDING STRONG

ERT

Legend

- Aerial Rocket Range Target #1 MRS
- Aerial Rocket Range Fan MRS
- NCF Property
- Formerly Used Defense Site (FUDS) Boundary

N
W E
S

0 2,500
Feet

Data sources: ESRI Online, USACE

Figure 2
NCF Property
LUCIP
Nantucket Beach FUDS
Nantucket, Massachusetts

N:\GIS\Northeast\Massachusetts\Nantucket\MXD\Property.mxd

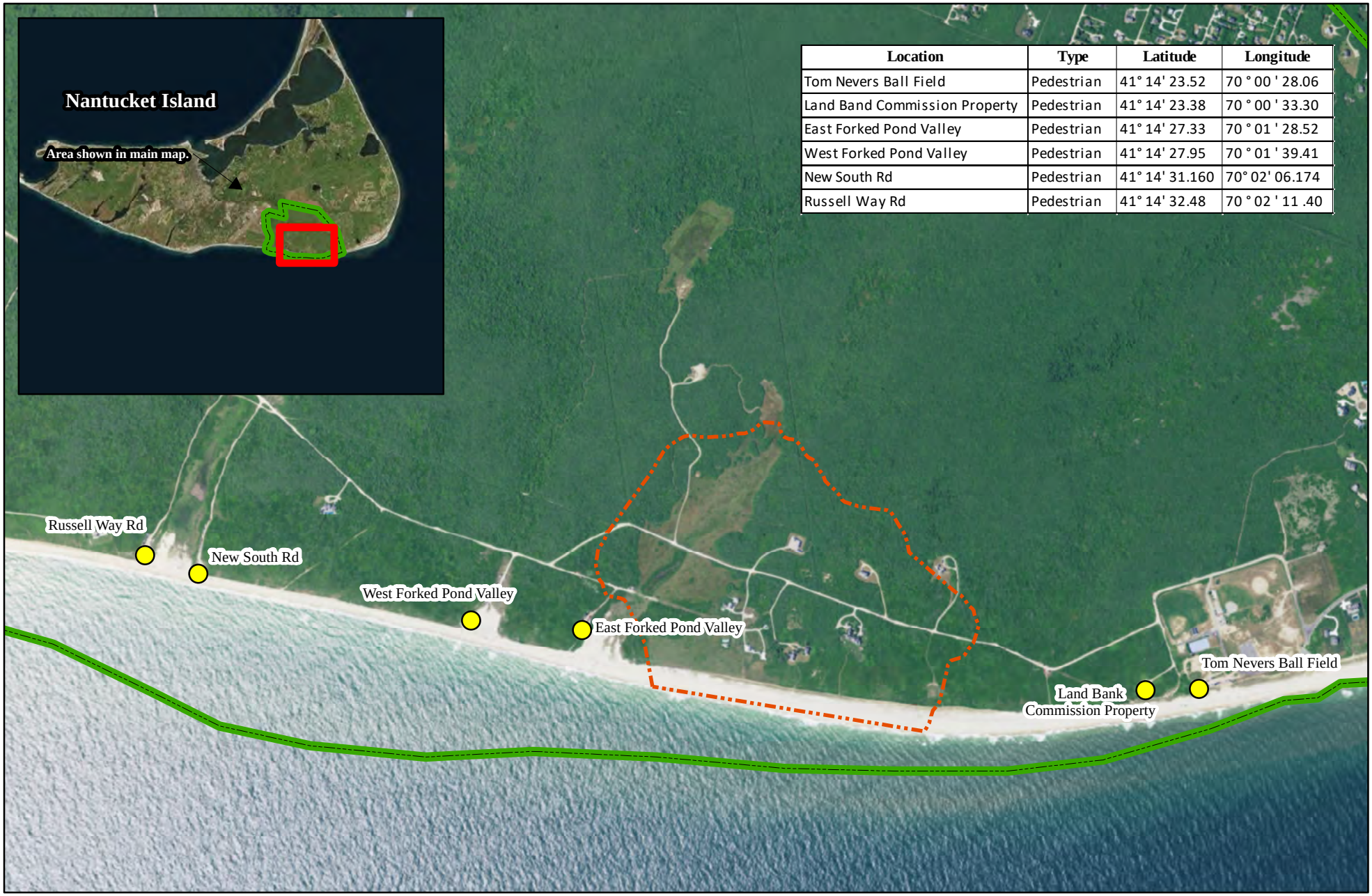

Location	Type	Latitude	Longitude
Tom Nevers Ball Field	Pedestrian	41° 14' 23.52	70 ° 00 ' 28.06
Land Band Commission Property	Pedestrian	41° 14' 23.38	70 ° 00 ' 33.30
East Forked Pond Valley	Pedestrian	41° 14' 27.33	70 ° 01 ' 28.52
West Forked Pond Valley	Pedestrian	41° 14' 27.95	70 ° 01 ' 39.41
New South Rd	Pedestrian	41° 14' 31.160	70° 02' 06.174
Russell Way Rd	Pedestrian	41° 14' 32.48	70 ° 02 ' 11 .40

US Army Corps of Engineers
BUILDING STRONG®

ERT

April 2017

Legend

Sign Locations

Aerial Rocket Range Target #1 MRS

Formerly Used Defense Site (FUDS) Boundary

N W E S

0 1,000
Feet

Data sources: ESRI Online, USACE

Figure 3
Sign Locations
LUCIP
Nantucket Beach FUDS
Nantucket, Massachusetts

N:\GIS\Northeast\Massachusetts\Nantucket\MXD\SignLocations.mxd

ATTACHMENT B

INSTITUTIONAL ANALYSIS

INSTITUTIONAL ANALYSIS

NANTUCKET BEACH, FORMER NANTUCKET ORDNANCE SITE A.K.A. TOM NEVERS ROCKET PROJECTILE TARGET; TOM NEVERS AREA, FORMERLY USED DEFENSE SITE PROJECT NUMBER D01MA045601 MUNITIONS RESPONSE SITE 1 MUNITIONS RESPONSE SITE 2 NANTUCKET, MASSACHUSETTS

MILITARY MUNITIONS RESPONSE PROGRAM

Contract No.: W912DR-09-D-0006
Delivery Order 0005
DCN No.: MAMMS05-100114-AAVE

Prepared For:

U.S. Army Corps of Engineers
New England District
696 Virginia Road
Concord, Massachusetts 01742

Contracted by:

U.S. Army Corps of Engineers
Baltimore District
10 South Howard Street
Room 10040-E
Baltimore, Maryland 21201

October 2014

Work Order No. 03886.551.004

INSTITUTIONAL ANALYSIS

NANTUCKET BEACH, FORMER NANTUCKET ORDNANCE SITE
A.K.A. TOM NEVERS ROCKET PROJECTILE TARGET;
TOM NEVERS AREA, FORMERLY USED DEFENSE SITE
PROJECT NUMBER D01MA045601
MUNITIONS RESPONSE SITE 1
MUNITIONS RESPONSE SITE 2
NANTUCKET, MASSACHUSETTS

MILITARY MUNITIONS RESPONSE PROGRAM

WESTON – Project Manager Chris Kane, PMP	2 October 2014 Date
WESTON – Author Marie Swiech-Laflamme	2 October 2014 Date

TABLE OF CONTENTS

Section **Page**

1. INTRODUCTION.....1
2. METHODOLOGY.....1
3. SCOPE OF EFFORT.....3
4. SELECTION CRITERIA AND REVIEW.....4
5. ACCEPTANCE OF JOINT RESPONSIBILITY.....7
6. TECHNICAL CAPABILITY.....7
7. INTERGOVERNMENTAL RELATIONSHIPS.....8
8. STABILITY.....8
9. FUNDING SOURCES.....8
10. RECOMMENDATIONS.....8
11. REFERENCES.....10

LIST OF TABLE

Title **Page**

Table 4-1 MRS Property Summary.....5

LIST OF ACRONYMS

Army	U.S. Army
CERCLA	Comprehensive Environmental Response, Compensation, and Liability Act
DERP	Defense Environmental Restoration Program
DoD	Department of Defense
EP	Engineer Pamphlet
ER	Engineer Regulation
EPA	U.S. Environmental Protection Agency
FS	feasibility study
FUDS	Formerly Used Defense Site
IC	institutional control
LUC	land use control
MassDEP	Massachusetts Department of Environmental Protection
MMRP	Military Munitions Response Program
MRS	munitions response site
NCF	Nantucket Conservation Foundation
NCP	National Oil and Hazardous Substances Pollution Contingency Plan
NILB	Nantucket Islands Land Bank
OE	ordnance and explosives
RI	Remedial Investigation
TPP	Technical Project Planning
U.S.	United States
USACE	U.S. Army Corps of Engineers
USAEC	U.S. Army Environmental Command
USC	United States Code
WESTON®	Weston Solutions, Inc.

1. INTRODUCTION

The Institutional Analysis identifies and analyzes the institutional framework necessary to support the development of an effective land use control (LUC) response action alternative for the Aerial Rocket Range Target #1 Munitions Response Site (MRS) based on institutional controls (ICs) that could be implemented to manage risk related to munitions. The Institutional Analysis was developed to support the Remedial Investigation (RI)/Feasibility Study (FS) being conducted at the Nantucket Beach, Former Nantucket Ordnance Site, a.k.a. Tom Nevers Rocket Projectile Target; Tom Nevers Area, Formerly Used Defense Site (FUDS), Project Number D01MA045601, located on Nantucket Island, Massachusetts. This FUDS will be referred to henceforth as the Nantucket Beach FUDS.

The RI/FS is being performed at the Nantucket Beach FUDS in support of the Defense Environmental Restoration Program (DERP) Military Munitions Response Program (MMRP). Weston Solutions, Inc., (WESTON®) was authorized to conduct the RI/FS through a firm fixed price, Performance-Based Acquisition under the United States (U.S.) Army Corps of Engineers (USACE), Baltimore District Multiple Award Military Munitions Services Contract W912DR-09-D-006, Delivery Order 0005 (USACE, 2011).

2. METHODOLOGY

Two types of general response actions are typically considered for remedial action at munitions response sites for comparison to a baseline condition of “no action”:

- **Risk Management -** Risk Management, which is considered a “limited” action alternative by the U.S. Environmental Protection Agency (EPA), includes various LUC options that rely on legal mechanisms, engineering controls, or administrative functions to control access or to modify human behavior and provide long-term management of risk.

- **Removal Action –** Remaining munitions can be detected and removed from the ground surface and/or below the ground surface. Alternatives for munitions clearance include technologies for detection, positioning for the detection technologies, removal, and disposal.

In accordance with DERP FUDS program guidance, the term LUCs encompasses physical, legal, or administrative mechanisms that restrict the use of, or limit access to, contaminated property in order to reduce risk to human health and the environment. Physical mechanisms encompass a variety of engineered remedies to contain or reduce contamination and physical barriers, such as fences or signs, to limit access to property. The legal mechanisms are generally the same as those used for ICs as discussed in the National Oil and Hazardous Substances Pollution Contingency Plan (NCP). The ICs are a subset of LUCs and are primarily legal mechanisms imposed to ensure the continued effectiveness of land use restrictions imposed as part of a remedial decision. Legal mechanisms include restrictive covenants, negative easements, equitable servitudes, and deed notices. Administrative mechanisms include notices, adopted local land use plans and ordinances, construction permitting, or other existing land use management systems that may be used to ensure compliance with use restrictions (USACE, 2004).

Development of LUC components considered for the Aerial Rocket Range Target #1 MRS referred to the USACE Guidance Engineer Pamphlet (EP) 1110-1-24, *Establishing and Maintaining Institutional Controls for Ordnance and Explosive (OE) Projects* (USACE, 2000), and EPA 540/R-09/001, *A Guide to Planning, Implementing, Maintaining, and Enforcing Institutional Controls at Contaminated Sites* (EPA, 2012). The main objective is to design controls that rely on legal mechanisms, physical barriers/warning, or administrative mechanisms, such as construction support or educational components to restrict access and/or modify human behavior to reduce exposure risks. The LUCs should be managed and maintained at the local level whenever possible. For FUDS properties, property owners or state/local government agencies with appropriate authorities (i.e., zoning boards) are often the best candidates for LUC management and enforcement (USACE, 2004). Effectiveness of LUCs is dependent on coordination and willingness to participate in maintenance/enforcement by all stakeholders for the duration that the specific control applies to the MRS.

The methodology used to evaluate potential LUCs focused on reducing the potential for handling munitions at the Aerial Rocket Range Target #1 MRS and included a review of the government institutions and non-government entities that have some form of jurisdiction or ownership of the properties within the MRS. Data was collected from site documentation, public records,

discussions with the project stakeholders at Technical Project Planning (TPP) sessions during the RI/FS and through the development of MRS-specific questionnaires sent to all stakeholders. Once jurisdiction and ownership were determined, information concerning these entities was reviewed, including the following: capabilities, resources, and willingness to participate. During the review of current and future capabilities of ICs, current and future land use and public safety resources were considered. The review and analysis focused on identifying potential controls that could be included in a comprehensive risk management strategy for the Aerial Rocket Range Target #1 MRS to support the FS effort.

3. SCOPE OF EFFORT

The Institutional Analysis was prepared in accordance with U.S. Army (Army) guidance, including MMRP document, *Final Military Munitions Response Program, Munitions Response Remedial Investigation/Feasibility Study Guidance* [U.S. Army Environmental Command (USAEC, 2009)], and EP 1110-1-24, *Establishing and Maintaining Institutional Controls for Ordnance and Explosives (OE) Projects* (USACE, 2000). The RI Report has been finalized (WESTON, 2013) and is being followed by a FS report that uses the findings of the RI to evaluate potential remedial alternatives to address risk related to munitions at the Aerial Rocket Range Target #1 MRS. Although no unexploded ordnance or discarded military munitions constituting munitions and explosives of concern with an associated explosive hazard were identified during the RI, munitions debris consisting of inert, practice aerial rockets and associated components were characterized and delineated within a 97-acre impact area. All material was ultimately classified as material documented as safe (WESTON, 2013).

The scope of effort for the Institutional Analysis is to gather information and document which stakeholder entities have jurisdiction over the Aerial Rocket Range Target #1 MRS, and to assess the capability and willingness of these entities to assert ICs that would protect the public from explosive hazards potentially present within the limits of the MRS. More specifically, this report identifies entities that have jurisdiction over the land within the Aerial Rocket Range Target #1 MRS; defines authority, responsibility, capability, resources, and the willingness of each entity to participate in ICs to protect the public from explosive hazards; identifies potential strategies

available to implement access control and/or public safety awareness actions for the property; and, defines and analyzes intergovernmental relationships, joint responsibilities, LUC functions, technical capabilities, funding sources, and recommendations.

4. SELECTION CRITERIA AND REVIEW

Based on relevance to the IC process for the MRS, the following agencies, individuals, and organizations were selected for the Institutional Analysis including: land owners, the Army, the Massachusetts Department of Environmental Protection (MassDEP), and the town/county of Nantucket, Massachusetts. Criteria used to identify these entities included: known jurisdiction as a public agency; authority to assist in implementation; responsibility for the control of land use; known willingness/ability to assist; land ownership; and, known resources and capability to provide public information or education for awareness activities.

Land owners: All land within the MRS boundary is demarcated into privately-owned parcels used for residential or conservation purposes with recreational access permitted within the non-residential properties. This includes portions of the beach along the southern boundary of the MRS. Based on the current property line configuration, there are five residential property owners in addition to the Nantucket Conservation Foundation (NCF) that currently own property within the Aerial Rocket Range Target #1 MRS 97-acre boundary and retain legal jurisdiction over the land. Land use types for parcels that fall within the MRS boundary at the time of the RI/FS within the MRS are summarized in **Table 4-1**.

Table 4-1 MRS Property Summary

Parcel Map and Lot No.*	Acreage	Land Use Type
77 2	3.8	Conservation
77 3.1	11.3	Residential (open space)
76 1	8.5	Conservation
90 9	37.7	Residential
91 1	9.3	Residential
91 118	6.2	Residential
91 119	14.2	Residential
91 2.2	1	Conservation
91 2.4	5.4	Residential
Total	**97.4**	

*Source: (Assessors Online Database for Nantucket, MA, last updated 3 March 2013)

All property owners have been involved in the investigation process through the use of TPP meetings, the securing of right-of-entry agreements, and the inclusion in report distribution for investigations findings for the MRS to date. Findings for the investigations are available to the property owners in hard copy report formats [prepared in accordance with Comprehensive Environmental Response, Compensation, and Liability Act (CERCLA) requirements] and electronically. Electronic Geographic Information System data files of investigation findings are also available from USACE and have been provided to NCF for integration into their database of property information. All property owners have been receptive to working with USACE to date and were specifically solicited for capabilities and willingness to participate in LUCs contemplated in the FS. Only one property owner (parcel 91 2.4) responded to USACE's request for information in the Institutional Analysis questionnaire. The property owner indicated a willingness/capability to distribute information provided by USACE, a willingness to allow signs to be posted and maintained on the property, and support of LUCs as part of a remedial alternative, but was not willing/capable to contribute funding for LUCs.

Department of the Army: The Army is the executive agent for the FUDS program, and USACE is the program's executing agent. USACE is the lead agency providing technical oversight and

project management with funding for response actions requested through the Environmental Restoration-FUDS account at the MRS. USACE must comply with the DERP statute [10 United States Code (USC) § 2701 et seq.], CERCLA (42 USC § 9601 et seq.), Executive Orders 12580 and 13016, the NCP, and all applicable Department of Defense (DoD) [e.g., EP 1110-1-18 (USACE, 2006), ER 200-3-1 (USACE, 2004), DoD *Management Guidance for the DERP* (DoD, 2012)] and Army policies in managing and executing the FUDS program (USACE, 2004). Because the land within the MRS is currently privately-owned, USACE has minimal control relative to implementing, maintaining, monitoring, or enforcing ICs.

Massachusetts Department of Environmental Protection: MassDEP is the support agency providing regulatory support for remedial decision-making at the MRS. MassDEP is the state agency responsible for ensuring clean air and water, the safe management of toxics and hazards, the recycling of solid and hazardous wastes, the timely cleanup of hazardous waste sites and spills, and the preservation of wetlands and coastal resources. MassDEP has been fully engaged in the TPP process at the MRS and has provided guidance on all activities performed to date. Based on the response received from solicitations regarding willingness and capability to participate in LUCs at the MRS, MassDEP indicated that the agency would be willing to distribute information provided by USACE and supports LUCs as part of a remedial alternative, but was not willing/capable to contribute to funding for LUCs.

Town of Nantucket: The town of Nantucket officials, responders, and various natural resource agencies have interest/involvement in the FUDS project, which was coordinated throughout the RI/FS. Specifically, Nantucket officials who may be solicited for information about the MRS have been made aware of the findings and progress of investigation at the MRS through routine presentations at town meetings; local responders have been alerted to munitions discovered at the MRS through the 911 system; and, the Nantucket Historical Association has been notified regarding signs to be installed for public information. Based on the response received from solicitations regarding willingness and capability to participate in LUCs at the MRS, the town of Nantucket indicated a capability and willingness to distribute information provided by USACE, including with construction permits issued, willingness to allow signage to be posted and

maintained for public awareness, and support for LUCs as part of a remedial alternative, but was not willing/capable to contribute to funding for LUCs except for reproduction of informational materials. Although not a land owner within the MRS boundary, the Nantucket Islands Land Bank (NILB) owns land in the vicinity of the MRS where the public can access the beach area within the MRS. The NILB was conceived by Nantucket's Planning Commission and was established by a special act of the Massachusetts Legislature in 1983 following adoption by the voters of Nantucket. The NILB acquired land for the purpose of public benefit and was contacted directly for willingness/capabilities regarding sign posting for public awareness/safety. The NILB indicated a capability and willingness to distribute information provided by USACE, a willingness to allow signage to be posted and maintained for public awareness, and support for LUCs as part of a remedial alternative, but was not willing/capable to contribute to funding for LUCs.

5. ACCEPTANCE OF JOINT RESPONSIBILITY

All property owners have been involved in the investigation process through the use of TPP meetings, the securing of right-of-entry agreements, and the inclusion in report distribution for investigations findings for the MRS to date. The LUC components being contemplated in the FS are designed to provide a mechanism that affects human behavior to reduce the risk of encountering munitions remaining at the MRS. LUCs established for the MRS require landowner support to be effective. As indicated above, only two of the landowners responded to the questionnaire developed by USACE to facilitate the Institutional Analysis; therefore, the willingness and capabilities of all landowners is not definitively known.

6. TECHNICAL CAPABILITY

Minimal technical capabilities are needed for the landowners to provide specific awareness to the property users or to limit access to their property. USACE is technically capable of performing all other potential response actions, including support in the form of technical guidance to property owners should they pursue establishing legal mechanisms for their properties to address munitions. MassDEP and the town of Nantucket, including officials and natural resource

agencies, are capable of the limited technical requirements to participate in LUC components established for the MRS.

7. INTERGOVERNMENTAL RELATIONSHIPS

USACE is the lead agency providing technical oversight and project management with funding for response actions requested through the Environmental Restoration-FUDS account at the MRS. MassDEP is the support agency for remedial decision-making at the MRS. Both agencies have worked successfully to perform investigation and response efforts to date. The landowners have control and jurisdiction over the land within the MRS in accordance with land use, ordinance, and zoning rules for the town of Nantucket.

8. STABILITY

The town of Nantucket, USACE, and MassDEP are all considered stable institutions. Although stable with regard to the ability to participate, the landowners' willingness to participate may be affected if the ownership of a parcel changes and becomes considered instable.

9. FUNDING SOURCES

Funding has been provided through the Army FUDS program. Additional funding will be required through the Engineer Regulation (ER)-FUDS account to implement a remedial alternative for the MRS.

With the exception of the town, which was willing to fund reproduction of the government provided materials, none of the stakeholders (one residential property owner, NILB, and MassDEP) that responded to the Institutional Analysis questionnaire provided by USACE indicated that they would be willing to fund IC components for the MRS as part of a remedial alternative.

10. RECOMMENDATIONS

There are no existing LUCs currently at the MRS; however, signage is under development for installation at public access points to provide awareness and public safety information

[i.e., recognize, retreat, and report (the 3Rs)] for the Aerial Rocket Range Target #1 MRS. The signs are being installed based on an interim recommendation made by USACE during a 2010 staff visit (USACE, 2010). The design for the signs is informational in nature and does not include any measure of access control. The signs will require adoption as a component of the final remedial alternative selected for the MRS to remain in place.

All project stakeholders will continue to be involved in the selection of a final remedy and implementation for this MRS in accordance with CERCLA and the NCP. The remedial action objective was established for the Aerial Rocket Range Target #1 MRS FS to reduce the probability of residents, NCF personnel, contractor/maintenance workers, visitors/trespassers, and recreational users handling munitions encountered during residential, construction/maintenance, and recreational activities performed at ground surface and in subsurface soil. The following risk management components have been identified that wholly compose a remedial alternative or have been selected to support an active clearance option being contemplated in the FS: informational materials and educational components to provide awareness and affect human behavior.

Based on the results of the Institutional Analysis, USACE shall manage and execute establishment of all LUC components included in the final remedy selected. Funding will be required through the ER-FUDS account to implement LUCs for the MRS. Regulatory agency support to distribute information provided by USACE can be provided by MassDEP; however, no contribution to funding for LUCs has been granted. The town of Nantucket is willing to distribute information provided by USACE; however, no contribution to funding for LUCs has been granted. Two property owners within the MRS and one adjacent to the boundary that provides access to the area indicated willingness to have signs posted and maintained by USACE on their property; however, they were not willing to participate in funding related to signage.

11. REFERENCES

"Assessors Online Database for Nantucket, MA," last updated 3 March 2013, accessed 3 October 2013, http://data.visionappraisal.com/NantucketMA/search.asp.

DoD (Department of Defense). 2012. *DoD Manual 4715.20, Defense Environmental Restoration Program (DERP) Management*. March 2012.

EPA (U.S. Environmental Protection Agency). 2012. *A Guide to Planning, Implementing, Maintaining, and Enforcing Institutional Controls at Contaminated Sites.* EPA 540/R-09/001. OSWER Directive 9355.0-89. December 2012.

HFA (Human Factors Applications, Inc./TerranearPMC, LLC). 2011. *Final Site Inspection Report for Nantucket Beach, Nantucket, MA.* DERP FUDS Project No. D01MA045601. April 2011.

USACE (United States Army Corps of Engineers). 2000. Engineer Pamphlet 1110-1-24, *Establishing and Maintaining Institutional Controls for Ordnance and Explosives (OE) Projects.* December 2000.

USACE. 2004. Engineer Regulation 200-3-1, *Formerly Used Defenses Sites (FUDS) Program Policy.* May 2004.

USACE. 2006. Engineer Pamphlet 1110-1-18. *Military Munitions Response Process.* 3 April 2006.

USACE. 2010. "Resume of Staff Visit, Nantucket Beach FUDS, Nantucket, MA, D01MA045601." June 2010.

USACE. 2011. Contract No. W912DR-09-D-0006, Delivery Order 0004, "Order for Supplies and Services," Baltimore, MD. September 2011.

USAEC (U.S. Army Environmental Command). 2009. *Final Military Munitions Response Program, Munitions Response Remedial Investigation/Feasibility Study Guidance*. October 2009.

WESTON (Weston Solutions, Inc.). 2013. *Final Remedial Investigation Report for the Nantucket Beach, Former Nantucket Ordnance Site A.K.A. Tom Nevers Rocket Projectile Target; Tom Nevers Area, Formerly Used Defense Site,* Prepared for the U.S. Army Corps of Engineers (USACE), Baltimore District, Baltimore, Maryland.

ATTACHMENT C

NANTUCKET BEACH FORMERLY USED DEFENSE SITE, POTENTIAL MUNITIONS IN SOIL HANDLING/MANAGEMENT GUIDANCE

FINAL

Nantucket Beach Formerly Used Defense Site

Potential Munitions in Soil Handling/Management Guidance

The Nantucket Beach, Former Nantucket Ordnance Site, Formerly Used Defense Site (FUDS), Project Number D01MA045601, located on Nantucket Island, Massachusetts is a former aerial rocket range. During the remedial investigation performed by the United States Army Corps of Engineers (2013), only inert practice munitions were found. No munitions recovered during our investigation contained explosives. However, this fact sheet and the attached brochure provide information to property owners and others involved in the handling of munitions potentially found in soil to assist in reducing any risk to human health and safety and the environment due to potential remaining munitions.

1. Prior to commencing any intrusive earth work within the target area (due diligence, construction or otherwise), property owners, workers, etc. should review the 3'Rs (Recognize, Retreat, Report) via the Department of Army Explosive Safety Education Website at www.denix.ods.mil/uxosafety. The 3-R's are intended to instruct on-site personnel on instructions on what to do if potential/suspected Unexploded Ordnance/Munitions and Explosives of Concern (UXO/MEC) is observed. Also see the brochure in Attachment D of the Land Use Controls Implementation Plan.

2. Avoidance procedures should be followed during any intrusive activities and property owners would be prudent in hiring qualified ordnance experts when conducting intrusive activities.

3. To the extent reasonably practicable, it is recommended that no soil should be transferred off the property due to the possibility of transferring munitions off site, unless it is screened for munitions by an ordnance expert.

4. There are no limitations on the extent of excavation within the footprint of the target area (Figure C-1). Property owners may dig laterally and vertically as necessary in accordance with Town of Nantucket, State, and Federal regulations. Property owners should instruct any workers performing intrusive activities regarding the potential for encountering munition items.

5. It is recommended that areas, where soil handling activities are performed, be monitored by qualified ordnance experts, in conjunction with the individuals performing the work, in advance of intrusive activities to confirm that no items are located on the ground surface, beach, bluff, etc. which are indicative of potential munitions items.

6. If a suspect item is encountered, perform the following:

   -**RECOGNIZE** (Do not touch, stop all operations in the area of the item, shut off all equipment in the area of the item)

   -**RETREAT** (Evacuate the area)

   -**REPORT** (CALL 911)

   Note: State Police and/or Explosive Ordnance Detachment will dispatch an emergency response to identify, relocate, and safely remove and/or destroy the item.

7. Soil handling activities may continue within the area where the potential munition item was located once the item is safely removed by State Police or other trained ordnance technicians (EOD). A minimum setback distance of 10 ft. is recommended if work is to be conducted adjacent to the potential munition item prior to identification and removal/ by State Police or EOD. "Soil handling" includes excavation of soil (digging, disturbance, removal, etc.). Disturbance may include above ground activities that disturb *in situ* soil (gardening, landscaping, vegetation clearing/grubbing, burning of vegetation, stump grinding and removal, etc.)

8. The property owner could consider hiring an ordnance trained technician for intrusive work involving potential munitions and soil handling activities.

US Army Corps of Engineers
BUILDING STRONG

ERT

Legend

Approximate Munitions Debris Density Per Acre

- Density 0.1-1
- Density 1-10
- Density 10-40
- Density 40+

- Aerial Rocket Range Target #1 MRS (97-Acre Area of Concern)
- Aerial Rocket Range Fan MRS
- Formerly Used Defense Site (FUDS) Boundary

N W E S

0 1,000
Feet

Data sources: ESRI Online, USACE

Attachment C - Figure C-1
Munitions Density
LUCIP
Nantucket Beach FUDS
Nantucket, Massachusetts

N:\GIS\Northeast\Massachusetts\Nantucket\MXD\SoilManagement.mxd

ATTACHMENT D

TRI-FOLD BROCHURE

BACKGROUND

The Nantucket Beach Formerly Used Defense Site (FUDS) is in southeastern Nantucket Island. The Nantucket Beach FUDS covers approximately one mile of beach and upland areas, starting at the Former Tom Nevers Naval Facility (the present site of the baseball fields) and heading west and north.

The Nantucket Beach FUDS was leased by the U.S. Government between September 1943 and 30 June 1946, and was used as a practice aerial rocket range. Training ceased on 1 September 1945. This was one of the three ranges on Nantucket used by the Navy pilots out of the Quonset Naval Air Station for training purposes. The most likely munitions remaining are rocket motor bodies that vary in size from 2.25 inches to 5 inches in diameter. Although these munitions have been in the environment for over 70 years, they remain dangerous.

Residents, visitors, and workers should be aware of the potential hazard munitions pose. To protect themselves, their families, and their neighbors, they should learn and follow the 3Rs of Explosives Safety.

REMEMBER THE 3Rs

Recognize	Recognize when you may have encountered a munition.
Retreat	Do not touch, move or disturb it, but carefully leave the area.
Report	Immediately notify the police. **Call 911**.

Visit the US Army's UXO Safety Eduction website:
https://www.denix.osd.mil/uxosafety

Nantucket Beach FUDS Information

An area that contains project related documents has been established at:

USACE New England District
696 Virginia Road
Concord, Massachusetts 01742

For more information, contact the USACE Project Manager:

Ms. Carol Ann Charette
978-318-8605 (office)
978-505-2918 (cell)
Carol.A.Charette@usace.army.mil

NANTUCKET BEACH FORMERLY USED DEFENSE SITE AERIAL ROCKET RANGE TARGET #1 MRS

3Rs EXPLOSIVES SAFETY GUIDE

Recognize

Recognizing when you may have encountered a munition is the most important step in reducing the potential risk of injury or death. Munitions may be found on land or in the water. They may be easy or hard to identify. If you come across or even suspect that you have encountered a munition, you must consider it dangerous.

Munitions, even suspect munitions, should never be touched, moved, or disturbed. You risk injury or death when disturbing munitions. Be aware that munitions make deadly souvenirs and they do not become safer with age, they often become more dangerous.

Munitions come in many sizes, shapes and colors. Some may look like bullets or bombs while others look like pipes, small cans or even a car muffler. Whether whole or in parts, new or old, shiny or rusty, munitions can still explode. The best way to stay safe is to learn and follow the 3Rs.

2.25 inch rocket

Retreat

Avoid death or injury by recognizing that you may have encountered a munition.

If you encounter what you believe is a munition, do not touch, move or disturb it. Instead, immediately and carefully leave the area, retracing your steps out of the area by the same path which you entered. Once safely away, mark the path with clothing or something else so it can be easily found once reported.

5 inch rocket warhead

Report

Protect yourself, your family, your friends and your community by immediately reporting munitions or suspected munitions to the police.

Provide as much information as possible about what you saw and where you saw it. This will help the police and military or civilian explosive ordnance disposal personnel find, evaluate and address the situation.

If you believe you may have encountered a munition, **call 911 and report the following:**

- The area where you encountered it
- Its general description. Remember, do not approach, touch, move or disturb it. When possible, provide:
  - Its estimated size
  - Its shape
  - Any visible markings, including coloring

ATTACHMENT E

NANTUCKET FUDS SIGN SPECIFICATIONS

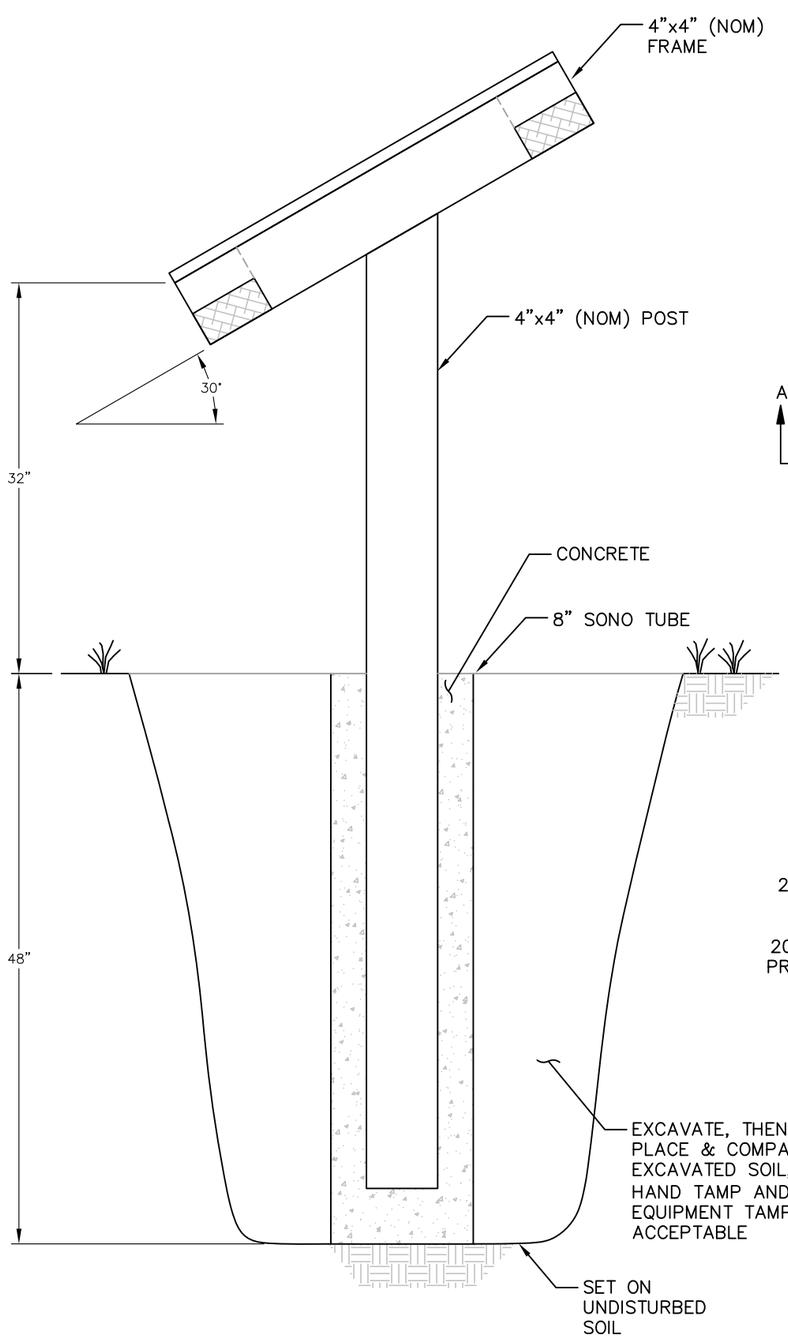

SIGN MOUNTING DETAIL

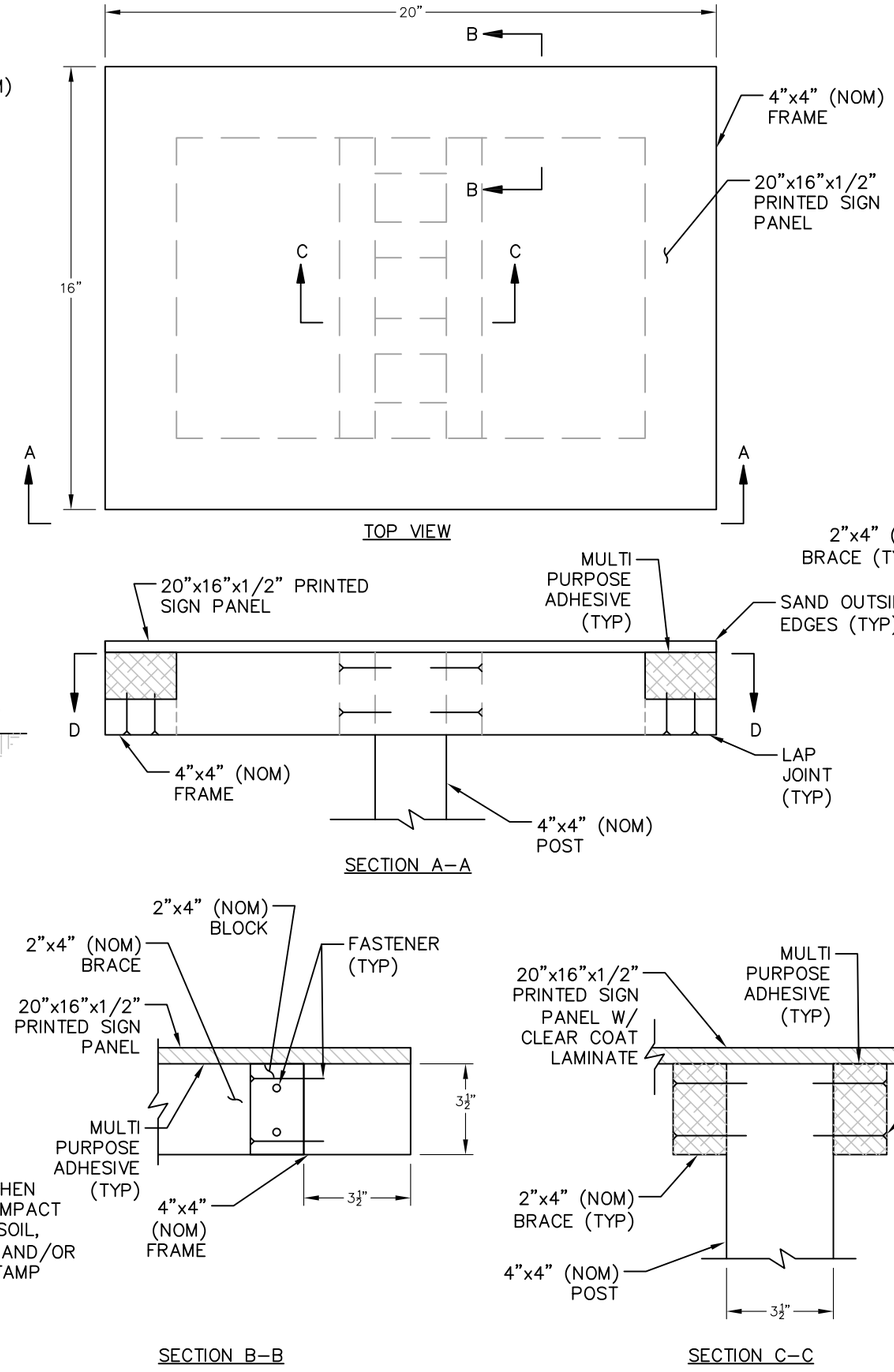

SIGN PANEL & FRAME DETAIL

NOTES:

1. UNLESS OTHERWISE NOTED, ALL MATERIALS SHALL BE GRADE #2 OR BETTER KDAT PRESERVATIVE TREATED WOOD (ACQ OR CA) LUMBER WITH AWPA STANDARD RETENTION FOR ABOVE GROUND EXPOSED USE (EXCEPT POSTS SHALL BE FOR GROUND CONTACT).

2. UNLESS OTHERWISE NOTED, ALL FASTENERS AND BRACKETS SHALL BE TYPE 304 OR 316 STAINLESS STEEL. FASTENERS SHALL BE RECESSED AND FLUSH (TAMPER RESISTANT TORX SCREWS OR EQUAL).

3. SIGN PANEL SHALL BE HDPE WITH CLEAR COAT LAMINATE.

4. MULTI PURPOSE ADHESIVE SHALL BE COMPATIBLE WITH TREATED LUMBER AND HDPE (TITEBOND INTERIOR/EXTERIOR CONSTRUCTION ADHESIVE, ECO–BOND HEAVY DUTY ADHESIVE OR LIQUID NAIL LN–150 ADHESIVE)

5. SIGNS SHALL BE PLACED AT LOCATIONS DESIGNATED BY THE LOCATION MAP AND SET SECURELY AND PLUMB.

6. 'ABSOLUTELY NO CAULKING ALLOWED ON SIGN STRUCTURE'.

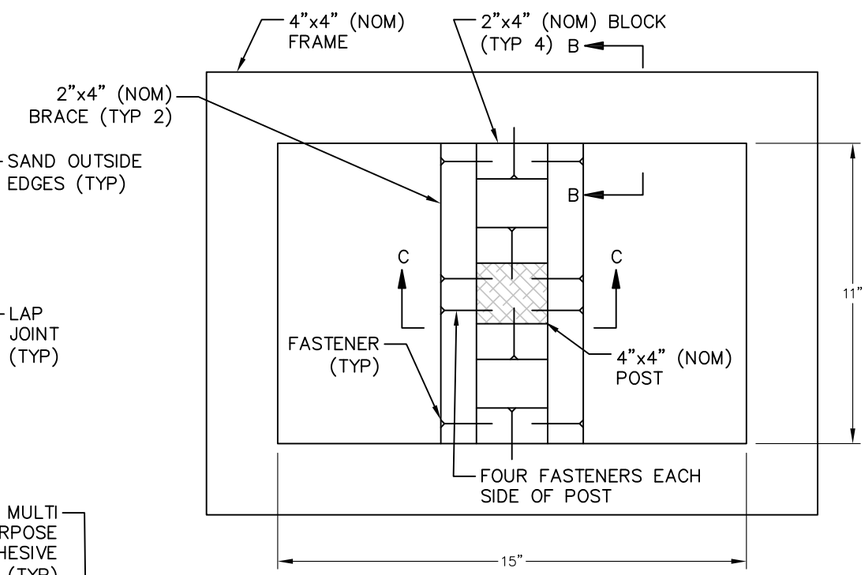

SECTION D–D

ITEM A - (6) POST & PANEL WITH PRINTS

SCALE: NTS

BM 9/22/15 RELEASED TO PRODUCTION

Job Name: NANTUCKET BEACHES	
Location: NANTUCKET MA	
Design Specifications Accepted By:	Drawn By: KAREN
	Sales Rep: MALT
Client:	PM: CD
Landlord:	Date: 8/27/15

BARLO SIGNS
158 Greeley St., Hudson, NH 03051
(603) 882-2638 Fax (603) 882-7680
For Service: 800-227-5674

PROJECT APPROVAL	
Design:	Date:
Engineering:	Date:
Estimating:	Date:
Sales:	Date:
Production:	Date:
Installation	Date:

© COPYRIGHT 2015 THE BARLO GROUP
THIS DESIGN CONCEPT IS THE PROPERTY OF THE BARLO GROUP, ALL PRODUCTION AND DUPLICATION RIGHTS ARE RESERVED BY THE BARLO GROUP. THIS PRINT IS DESIGNED FOR YOUR PERSONAL USE AND IS NOT TO BE USED OUTSIDE YOUR ORGANIZATION OR EXHIBITED IN ANY FASHION.

Underwriters Laboratories Inc.®

File Name: Nantucket Beaches 150813056 CO 9-24 U

B-15-08-13056 SHEET: 1.0

JOB #93814

PARTS LIST		
KEY	DESCRIPTION	BARLO PART #
	4"x4"x10' CA Pressure Treated #2 Lumber	HD SKU 257974
	2"x4"x10' CA Pressure Treated #2 Lumber	HD SKU 254907
	Liquid Nails Heavy Duty Construction Adhesive	
	8"x48" SonoTube	
	#10 x 2.5" Flat head Stainless Steel Star Drive deck screw	
	80 lb bags concrete mix	

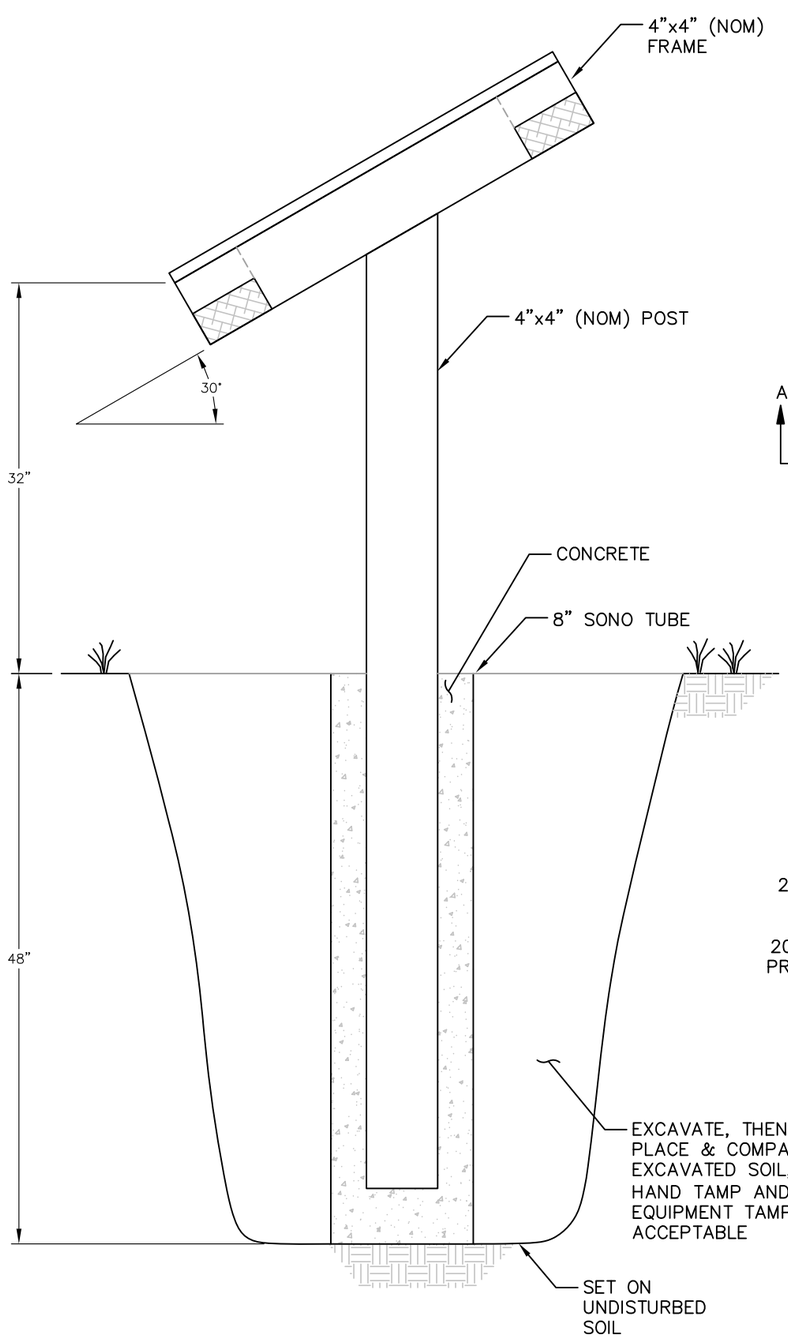

SIGN MOUNTING DETAIL

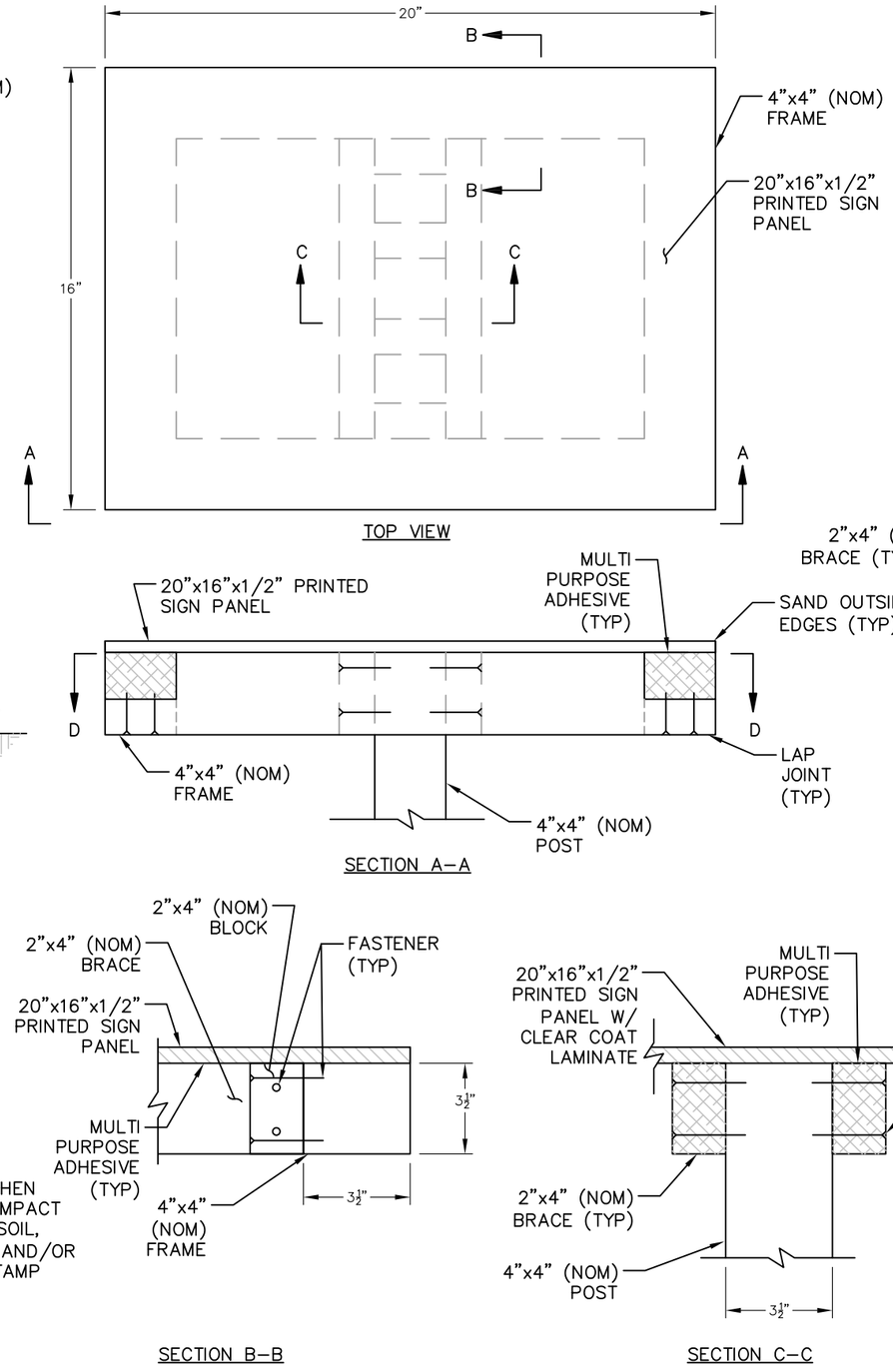

SIGN PANEL & FRAME DETAIL

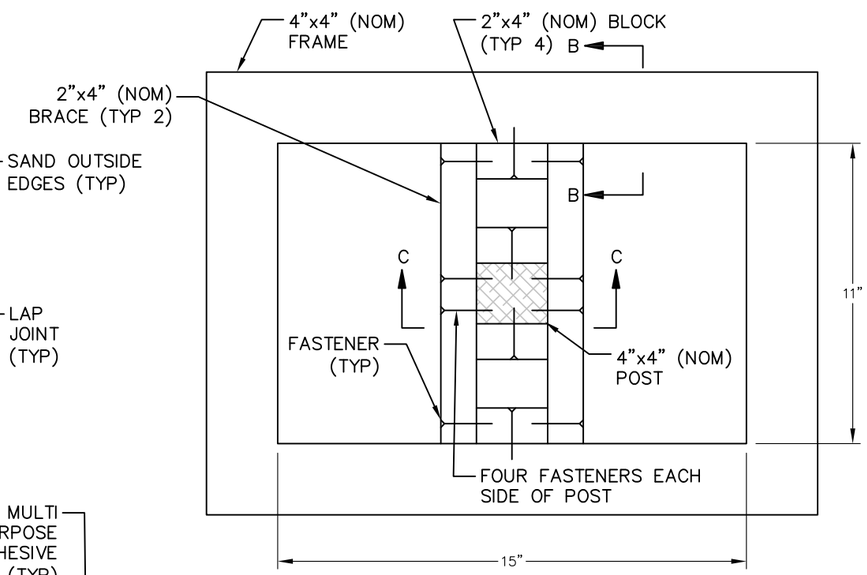

SECTION D–D

ITEM A - (6) POST & PANEL WITH PRINTS

SCALE: NTS

BM 9/22/15 RELEASED TO PRODUCTION

Job Name: NANTUCKET BEACHES	
Location: NANTUCKET MA	
Design Specifications Accepted By:	Drawn By: KAREN
	Sales Rep: MALT
Client:	PM: CD
Landlord:	Date: 8/27/15

BARLO SIGNS
158 Greeley St., Hudson, NH 03051
(603) 882-2638 Fax (603) 882-7680
For Service: 800-227-5674

PROJECT APPROVAL	
Design:	Date:
Engineering:	Date:
Estimating:	Date:
Sales:	Date:
Production:	Date:
Installation	Date:

© COPYRIGHT 2015 THE BARLO GROUP
THIS DESIGN CONCEPT IS THE PROPERTY OF THE BARLO GROUP, ALL PRODUCTION AND DUPLICATION RIGHTS ARE RESERVED BY THE BARLO GROUP. THIS PRINT IS DESIGNED FOR YOUR PERSONAL USE AND IS NOT TO BE USED OUTSIDE YOUR ORGANIZATION OR EXHIBITED IN ANY FASHION.

Underwriters Laboratories Inc.®

File Name: Nantucket Beaches 150813056 CO 9-24 U

B-15-08-13056

SHEET: 1.1

20”

16”

QTY: (1)

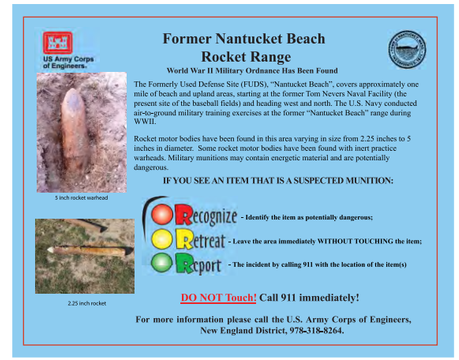

QTY: (1)

QTY: (4)

TOTAL QTY (6) - LOW RESOLUTION PHOTOS (DO NOT USE FOR PRODUCTION)
SEE; ENG/ ARTWORK -per Art Dept FOLDER
(1) EPS FOLDER
(1) PDF FOLDER

AS OF CO 9-24 4:20 PM KD

POST AND PANEL JOB	CREW POST AND PANEL JOB
■ Single Face ☐ Double Face	**Loc.Plan Provided:** ■ Yes ☐ No ----
■ Custom **Extrusion Type: WOOD**	**Hand Dig:** ■ Yes ☐ No ----
Cabinet Depth: 4”	
Pole Size: 4” x 4” x 80” ■ New	**Equip. Rental Req:**–– ----16” auger 2 man
	Special Note:–––
Copy: digital prints w/ lam	

CHPL GRAPHIC PANELS BY FOSSIL INDUSTRIES
PT WOOD SIGN STRUCTURES BY BARLO HUDSON

BM 9/22/15 RELEASED TO PRODUCTION

JOB#:

SCOPE OF WORK - BARLO HUDSON

ITEM A - MANUFACTURE & INSTALL
(6) PEDESTRIAN SIGNS W/ (6) DIGITAL PRINTS

Sign Area: 2.2 SF

Artwork Req: ☐ Yes ■ No
—

Photos Avail: ■ Yes ☐ No
—

Sign Deposition:
NA

Corp Specs Avail: ☐ Yes ■ No
—

POST AND PANEL

Face/Background: Preservative treated wood lumber w/ standard retention for above ground exposed use, (except post shall be for ground contact)
All fasteners and brackets shall be stainless steel
S/S tamper resistant hardware

(6) High resolution color prints 16” X 20” X 1/2”

ALL COLORS ARE FOR REPRESENTATION ONLY.
SEE ACTUAL SAMPLES FOR COLOR MATCH.

GENERAL NOTES

8-31-15 KD- CHG PG LAYOUT ONLY

MFG
■ Barlo
☐ BarloMex
☐ Sub
☐ Other:

INSTALLATION
■ Barlo
☐ Sub:----
☐ Other:

Job Name: NANTUCKET BEACHES
Location: NANTUCKET MA

Design Specifications Accepted By:
Client:
Landlord:

Drawn By: KAREN
Sales Rep: MALT
PM: CD
Date: 8/27/15

PROJECT APPROVAL

Design:	Date:
Engineering:	Date:
Estimating:	Date:
Sales:	Date:
Production:	Date:
Installation	Date:

BARLO SIGNS
158 Greeley St., Hudson, NH 03051
(603) 882-2638 Fax (603) 882-7680
For Service: 800-227-5674

© COPYRIGHT 2015 THE BARLO GROUP
THIS DESIGN CONCEPT IS THE PROPERTY OF THE BARLO GROUP, ALL PRODUCTION AND DUPLICATION RIGHTS ARE RESERVED BY THE BARLO GROUP. THIS PRINT IS DESIGNED FOR YOUR PERSONAL USE AND IS NOT TO BE USED OUTSIDE YOUR ORGANIZATION OR EXHIBITED IN ANY FASHION.

Underwriters Laboratories Inc.®

File Name: Nantucket Beaches 150813056 CO 9-24 U

B-15-08-13056 **SHEET: 2.0**

US Army Corps of Engineers®

Former Nantucket Beach Rocket Range

NANTUCKET LAND BANK COMMISSION
22 BROAD STREET, NANTUCKET, MASSACHUSETTS 02554
TELEPHONE (508) 228-7240 • FACSIMILE (508) 228-9369

World War II Military Ordnance Has Been Found

5 inch rocket warhead

The Formerly Used Defense Site (FUDS), "Nantucket Beach", covers approximately one mile of beach and upland areas, starting at the former Tom Nevers Naval Facility (the present site of the baseball fields) and heading west and north. The U.S. Navy conducted air-to-ground military training exercises at the former "Nantucket Beach" range during WWII.

Rocket motor bodies have been found in this area varying in size from 2.25 inches to 5 inches in diameter. Some rocket motor bodies have been found with inert practice warheads. Military munitions may contain energetic material and are potentially dangerous.

IF YOU SEE AN ITEM THAT IS A SUSPECTED MUNITION:

2.25 inch rocket

Recognize - Identify the item as potentially dangerous;

Retreat - Leave the area immediately WITHOUT TOUCHING the item;

Report - The incident by calling 911 with the location of the item(s)

DO NOT Touch! Call 911 immediately!

For more information please call the U.S. Army Corps of Engineers, New England District, 978-318-8264.

US Army Corps of Engineers®

Former Nantucket Beach Rocket Range

NANTUCKET CONSERVATION FOUNDATION

World War II Military Ordnance Has Been Found

5 inch rocket warhead

The Formerly Used Defense Site (FUDS), "Nantucket Beach", covers approximately one mile of beach and upland areas, starting at the former Tom Nevers Naval Facility (the present site of the baseball fields) and heading west and north. The U.S. Navy conducted air-to-ground military training exercises at the former "Nantucket Beach" range during WWII.

Rocket motor bodies have been found in this area varying in size from 2.25 inches to 5 inches in diameter. Some rocket motor bodies have been found with inert practice warheads. Military munitions may contain energetic material and are potentially dangerous.

IF YOU SEE AN ITEM THAT IS A SUSPECTED MUNITION:

2.25 inch rocket

Recognize - Identify the item as potentially dangerous;

Retreat - Leave the area immediately WITHOUT TOUCHING the item;

Report - The incident by calling 911 with the location of the item(s)

DO NOT Touch! Call 911 immediately!

For more information please call the U.S. Army Corps of Engineers, New England District, 978-318-8264.

US Army Corps of Engineers®

Former Nantucket Beach Rocket Range

World War II Military Ordnance Has Been Found

5 inch rocket warhead

The Formerly Used Defense Site (FUDS), "Nantucket Beach", covers approximately one mile of beach and upland areas, starting at the former Tom Nevers Naval Facility (the present site of the baseball fields) and heading west and north. The U.S. Navy conducted air-to-ground military training exercises at the former "Nantucket Beach" range during WWII.

Rocket motor bodies have been found in this area varying in size from 2.25 inches to 5 inches in diameter. Some rocket motor bodies have been found with inert practice warheads. Military munitions may contain energetic material and are potentially dangerous.

IF YOU SEE AN ITEM THAT IS A SUSPECTED MUNITION:

2.25 inch rocket

Recognize - Identify the item as potentially dangerous;

Retreat - Leave the area immediately WITHOUT TOUCHING the item;

Report - The incident by calling 911 with the location of the item(s)

DO NOT Touch! Call 911 immediately!

For more information please call the U.S. Army Corps of Engineers, New England District, 978-318-8264.

Nantucket, MA

US Army Corps of Engineers
Baltimore District

Pedestrian Sign Location Map

Group Map

Pedestrian Sign Locations

N

Nantucket, MA

US Army Corps of Engineers
Baltimore District

Pedestrian Sign Location Map

Pedestrian Sign 1
Tom Nevers Ball Field

Pedestrian Sign Location

N 41 14’ 23.52
W 70 00’ 28.06

N

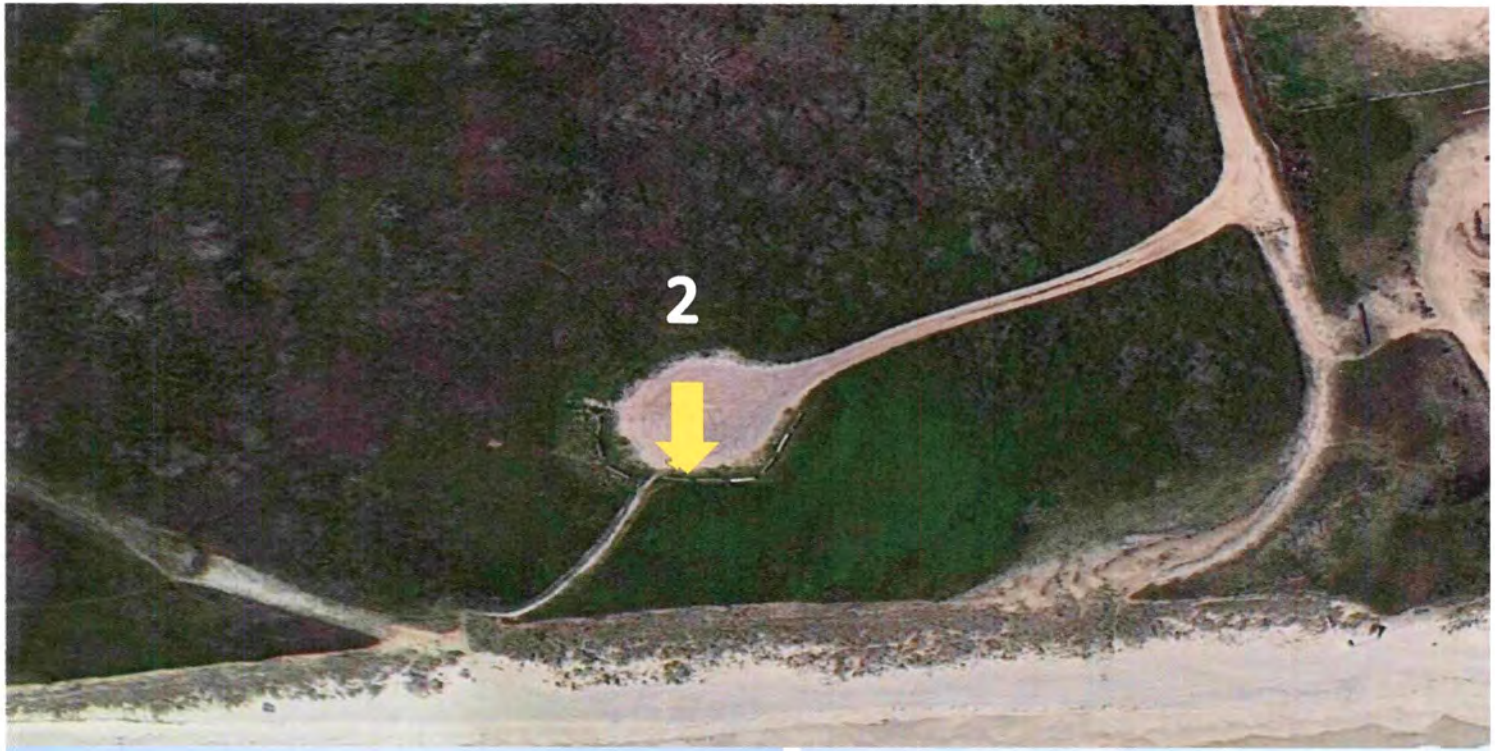

Nantucket, MA

US Army Corps of Engineers
Baltimore District

Pedestrian Sign Location Map

Pedestrian Sign 2
Land Bank Commission Property

Pedestrian Sign Location

N 41 14' 23.38
W 70 00' 33.30

N

Nantucket, MA

US Army Corps of Engineers
Baltimore District

Pedestrian Sign Location Map

Pedestrian Sign 3
East Forked Pond Valley

Pedestrian Sign

N 41 14' 27.33
W 70 01' 28.52

N

Nantucket, MA

US Army Corps of Engineers
Baltimore District

Pedestrian Sign Location Map

Pedestrian Sign 4
West Forked Pond Valley

Pedestrian Sign Location

N 41 14' 27.95
W 70 01' 39.41

N

Nantucket, MA

US Army Corps of Engineers
Baltimore District

Pedestrian Sign Location Map

Pedestrian Sign 5
New South Rd

Pedestrian Sign Location

N41 14' 31.160"

~~N 41 13' 31.28~~

~~W 70 02' 06.58~~

W 070 2' 6.174"

N

Nantucket, MA

US Army Corps of Engineers
Baltimore District

Pedestrian Sign Location Map

Pedestrian Sign 6
Russell Way Rd

Pedestrian Sign Location

N 41 14’ 32.48
W 70 02’ 11.40

N

TOM NEVERS BEACH AREA, NANTUCKET SIGNAGE LOCATOR

Location Name	Sign Type	Approximate Latitude	Approximate Longitude	Method of Installation
Tom Nevers Area				
Pedestrian Sign 1 Tom Nevers Ball Field	Pedestrian	N 41° 14' 23.52	W 070° 00' 28.06	Signs will be installed in concrete and buried 4 feet in sand.
Pedestrian Sign 2 Land Band Commission Property	Pedestrian	N 41° 14' 23.38	W 070° 00' 33.30	Signs will be installed in concrete and buried 4 feet in sand.
Pedestrian Sign 3 East Forked Pond Valley	Pedestrian	N 41° 14' 27.33	W 070° 01' 28.52	Signs will be installed in concrete and buried 4 feet in sand.
Pedestrian Sign 4 West Forked Pond Valley	Pedestrian	N 41° 14' 27.95	W 070° 01' 39.41	Signs will be installed in concrete and buried 4 feet in sand.
Pedestrian Sign 5 New South Rd	Pedestrian	~~N 41° 13' 21.28~~	~~W 070° 02' 06.58~~	Signs will be installed in concrete and buried 4 feet in sand.
Pedestrian Sign 6 Russell Way Rd	Pedestrain	N 41° 14' 32.48	W 070° 02' 11.40	Signs will be installed in concrete and buried 4 feet in sand.

N41 14' 31.160"

W 070 2' 6.174"

ATTACHMENT F

LUC INSPECTION CHECKLIST

Sign Inspection Form

I. Site Information				
Site Name: Nantucket Beach FUDS		**Date(s) of Inspection:**		
Location and Region: Nantucket, MA				
II. Sign Inspection				
Sign Location	**Condition** (poor, fair, good, excellent)	**Maintenance Required** (cleaning, repair, replacement)	**Maintenance Performed** (type and date)	**Notes:** (include photograph documentation before and after maintenance)
Russell Way Road				
New South Road				
West Forked Pond Valley				
East Forked Pond Valley				
Land Bank Commission Property				
Tom Nevers Ball Field				
III. Additional Notes				

Site Inspection Form

I. Site Information	
Site Name: Nantucket Beach FUDS	**Date(s) of Inspection:**
Location and Region: Nantucket, MA	

II. Site Inspection		
Approximate Location (note landmarks and/or approximate coordinates)	**Site Conditions of Note (e.g., significant erosion since last site inspection, observations of potential MEC or MD, other observations that impact LUC implementation.**	**Notes:** (include photograph documentation)

III. Additional Notes		

Interview Report Form

I. Site Information		
Site Name: Nantucket Beach FUDS		**Date(s) of Inspection:**
Location and Region: Nantucket, MA		
II. Interview Activity		
Individual Interviewed	**Date of Interview**	**Brief Description of Discussion (include reports of onsite intrusive activities, EOD response action, etc.)**

III. Additional Notes		

EOD Activity Report Form

I. Site Information						
Site Name: Nantucket Beach FUDS	**Date(s) of Inspection:**					
Location and Region: Nantucket, MA						
II. EOD Activity Summary						
Date of Discovery	**Item Location (include description and coordinates, if known)**	**Item Description**	**Item Disposition**	**Disposition Date**	**EOD Report Number**	**Notes:**

III. Additional Notes