$25.00 FEE
PAYABLE TO THE TOWN OF NANTUCKET

Planning and Land Use Services

Building ▪ Health ▪ Historic District Commission ▪ Planning Board ▪ Zoning Board of Appeals

_____ DATE RECEIVED

_____ MAP _____ LOT

BUILDING DIVISION

WOOD STOVE APPLICATION/SOLID FUEL BURNING HEATING APPLIANCE PERMIT

OWNER_____

ADDRESS_____

INSTALLER_____

ADDRESS_____

****

HEATING APPLIANCE INFORMATION

1. LOCATION:_____
2. MANUFACTURER'S NAME AND TRADEMARK:_____
3. MODEL AND/OR IDENTIFICATION NO.:_____
4. TYPE OF FUEL(S) APPROVED:_____
5. TESTING LABORATORY'S NAME OR TRADEMARK _____
   AND LOCATION:_____
6. DATE TESTED:_____
7. CLEARANCE TO COMBUSTIBLES:_____
   A) SIDE_____ B) REAR_____
8. TEST STANDARD:_____
9. LABEL SERIAL NO.:_____

_____ DATE

_____ SIGNATURE OF APPLICANT

****

FOR DEPARTMENT USE ONLY

□ APPROVED

□ DISAPPROVED

□ APPROVED W/CORRECTION OF NOTED VIOLATIONS

VIOLATIONS: 1._____

2._____

3._____

PERMIT NO._____

CHECK NO._____

DATE OF INSPECTION:_____

_____
BUILDING OFFICIAL

REV. 08/25/2014

WOOD STOVE INSTALLATION CHECKLIST

PERMIT

A building permit is required for the installation of any solid fuel burning appliance. The building permit and installation inspection are limited to the stove installation and not to the stove construction.

STOVE

A. New_____ Used_____

B. Type/Radiant_____ Circulating_____

C. Manufacturer_____ Lab No._____

Name/Model No._____ Collar Size_____

Dimensions/Height_____ Length_____ Width_____

CHIMNEY

A. New_____ Existing_____

B. Size (flue area)_____

C. Other appliances attached to flue (Number and flue size)_____

D. Prefab (Manufacturer – name and type)_____

E. Masonry/Lined_____ Flue Liner_____

Unlined_____ (TYPE & MANUFACTURER)

F. Height (refer to diagrams)_____Cap_____

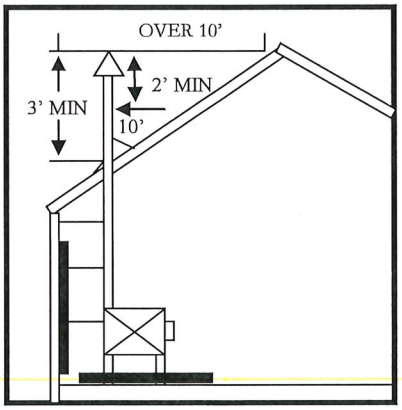

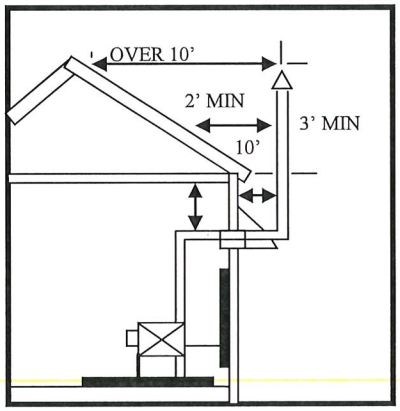

CHIMNEY HEIGHT

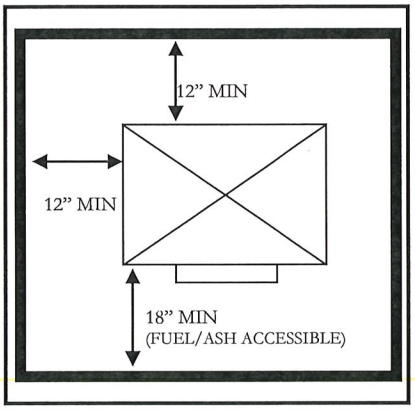

HEARTH

HEARTH (non-combustible)

A. Materials_____

B. Sub-floor construction_____

C. Minimum dimensions (refer to diagram)

CLEARANCES and WALL PROTECTION (see stove installation clearances chart)

A. Type of wall protection provided_____

B. Clearances (refer to diagrams)

FIREPLACE

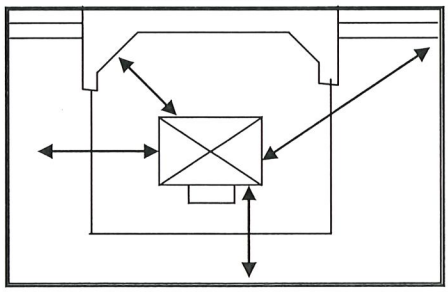

CORNER

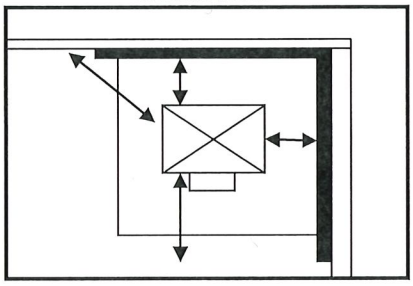
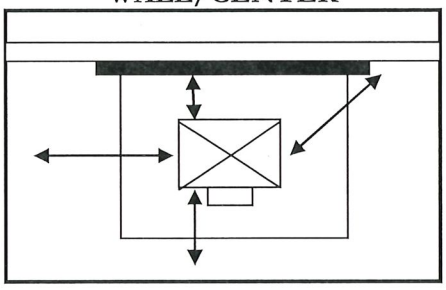
WALL/CENTER