146 Dascomb Road
Andover, MA 01810
978.794.1792
TheEngineeringCorp.com
Create | Design | Innovate

MEMORANDUM

TO: Rob McNeil
Town of Nantucket
188 Madaket Road
Nantucket, MA 02554

DATE: June 24, 2020
Revised 9/14/20

FROM: Bob Niccoli, P.E., S.E.

PROJECT NO.: T0863

RE: Alternatives Analysis of Massasoit Road Bridge and Ames Avenue (Millie's) Bridge

---

INTRODUCTION

The Town of Nantucket (Client) has retained TEC, Inc. (TEC) to perform engineering services in evaluating and assessing the existing conditions for two of its municipally owned structures, Br. N-02-004; Massasoit Road over Long Pond and Br. N-02-003; Ames Avenue over Hither Creek (Millie's Bridge). The Town most recently needed to address emergency structural deficiencies at the Massasoit Road Bridge, and continually notes coastal resiliency concerns at the Ames Avenue Bridge including sand deposits and altered hydraulics resulting in embankment erosion. The scope of work includes land surveying, hydraulic studies, field inspection and assessment, geotechnical investigation and preparation of reports evaluating existing conditions and possible rehabilitation as well as replacement alternatives.

Nantucket Surveyors, LLC has been retained to perform surveying services for the project sites. Childs Engineering (Childs) has been retained to perform all coastal engineering and hydraulic services for the project sites. Geosciences Testing and Research, Inc. (GTR) has been retained to perform geotechnical engineering services for the project sites.

TEC has used the above noted information to perform an alternatives analysis for both project sites. The analysis has investigated the existing condition of the structures and possible rehabilitation and replacement alternatives.

Separate analysis reports have been prepared to distinguish between the highway work and the bridge work of the alternatives evaluated in order to prepare bridge reports that follow the guidelines established in the 2013 MassDOT Bridge Manual to allow the Town to potentially pursue MassDOT funding. The reports prepared and contents discussed are as follows:

- Highway Alternative Analysis Report For Massasoit Bridge over Long Pond (BR. N-02-004) & Ames Avenue Bridge over Hither Creek (BR. N-02-003)
  - Evaluates the highway work associated with a rehabilitation and replacement alternative for both project sites.

- Bridge No. N-02-003 (442) Ames Ave Bridge over Hither Creek, Preliminary Structures Report

- Evaluates the bridge work associated with a rehabilitation alternative for the Ames Avenue bridge including an assessment of the existing conditions.

- Bridge Type Selection Worksheet, Ames Ave over Hither Creek (N-02-003)
  - Evaluates the bridge work associated with a replacement alternative for the Ames Avenue bridge.

- Bridge No. N-02-004 (443) Massasoit Road Bridge over Long Pond, Preliminary Structures Report
  - Evaluates the bridge work associated with a rehabilitation alternative for the Massasoit Road bridge including an assessment of the existing conditions.

- Bridge Type Selection Worksheet, Massasoit Road over Long Pond (N-02-004)
  - Evaluates the bridge work associated with a replacement alternative for the Massasoit Road bridge.

This memo will serve to summarize the information and recommendations contained within these reports and provide recommendations including both highway and bridge related work.

ALTERNATIVES ANALYSIS:

TEC has investigated the highway work and bridge work associated with rehabilitation and replacement alternatives for each project site. Please see below for a description of the proposed scope of work for each alternative.

Massasoit Bridge over Long Pond

Rehabilitation – With/Without a Sidewalk:

The proposed scope of work includes structural repairs to noted deficiencies, replacement of traffic safety features, re-alignment of Massasoit Bridge Road and intersecting side roads, additional traffic signage and roadway surface improvements. Deficiencies addressed include replacement of the existing knee-bracing and fasteners. Traffic safety improvements include replacement of the existing bridge rail and guardrail with crash tested timber bridge rail, transitions, approach guardrail and guardrail end treatments. The re-alignment of Massasoit Bridge Road proposes to remove an undesirable angle with conventional T-intersections and bring the Town roadway out of private property and back into Town right-of-way. The additional traffic signage includes installing traffic signage per MUTCD guidance. Roadway surface improvements include construction of 25'+/- paved approaches immediately before and after the bridge, and the replacement of the existing roadway sand with crushed gravel. This alternative has been evaluated with the option to add an additional 5-foot sidewalk to the bridge's west side, the proposed scope of work noted above is the same for both options.

This option will provide a service life of approximately another 25-years and increase the load carrying capacity to support statutory loading. The existing bridge is subject to wave action and may flood

occasionally due to high tide in 2040 and likely on a daily basis in 2060 due to sea level rise. The proposed scope of work for rehabilitation without a sidewalk is $653,000 for both highway and bridge work. The proposed scope of work for rehabilitation with a sidewalk is $751,000 for both highway and bridge work. (Identified as Options 2a & 2b respectively in the Highway Alternatives Analysis Report.)

Replacement:

The proposed scope of work includes the replacement of the existing timber bridge and guardrail with a two-span concrete beam bridge with integral abutments and a pier. The bridge would support two 10-foot travel lanes and a 5-foot sidewalk and have crash tested bridge railings, transitions, guardrail and end treatments. The roadway profile would be raised by 5-feet to accommodate sea level rise and would include re-alignment of approach roadways, additional traffic signage and roadway surface improvements, similar to the rehabilitation options.

This option will provide a bridge with a 75-year design life and will be designed for current loading requirements. It will raise the roadway profile by 5-feet to account for anticipated sea level rise while reducing roadway impacts. The bridge will be subject to wave action similar to the existing bridge and may continue to be overtopped during the 100-year FEMA Stillwater event, both after sea level rise has occurred. It will be designed for the lateral loading and buoyant forces. The proposed scope of work is for replacement $3,340,000 for both highway and bridge work. (Identified as Option 1 in the Highway Alternatives Analysis Report.)

Ames Avenue Bridge over Hither Creek

Rehabilitation:

The proposed scope of work includes structural repairs to noted deficiencies, strengthening of structural members, erosion protection, replacement of traffic safety features and proposed roadway drainage. Deficiencies addressed include repairs of the timber piles and replacement of cross-bracing. Strengthening retrofit measures include adding steel plates to existing timber stringers and pile caps. Erosion protection includes installation of a well graded riprap. Traffic safety improvements include replacement of the existing bridge rail, guardrail, sidewalk and pedestrian rail with crash tested timber bridge rail, transitions, approach guardrail and guardrail end treatments. Also included in a new timber sidewalk and pedestrian railing. Drainage improvements include the installation of catch basins at the roads' low points.

This option will extend the bridge's service life approximately another 25-years and increase the load carrying capacity to support statutory loading. The existing bridge is subject to wave action during the 100-year FEMA Stillwater event and may flood occasionally due to high tide in 2070 and on a daily basis in 2080 due to sea level rise. The proposed scope of work for rehabilitation is $1,564,000 for both highway and bridge work. (Identified as Option 1 in the Highway Alternatives Analysis Report.)

Replacement:

The proposed scope of work includes the replacement of the existing timber bridge and guardrail with a two-span concrete beam bridge with integral abutments and a pier. The bridge would support two 10-foot travel lanes a 5-foot sidewalk and have crash tested bridge railings, transitions, guardrail and end treatments. The roadway profile would be raised by 3-feet to accommodate sea level rise and would include intersection improvement at California Ave and the installation of catch basins at the road's low points.

This option will provide a bridge with a 75-year design life and will be designed for current loading requirements. It will raise the roadway profile by 3-feet to account for anticipated sea level rise while reducing roadway impacts. Since the bridge will be subject to wave action similar to the existing bridge after sea level rise has occurred, it will be designed for this lateral loading. The proposed scope of work for replacement is $4,577,000 for both highway and bridge work. (Identified as Option 2 in the Highway Alternatives Analysis Report.)

CONCLUSIONS & RECOMMENDATIONS:

Massasoit Bridge over Long Pond

TEC recommends that the rehabilitation alternative is pursued for further design and investigation. The existing bridge is in good condition with no notable deficiencies and is capable of supporting statutory loading. The existing bridge's service life is limited by the age of the existing timber piles, which are currently estimated to have 25-years remaining. Due to sea level rise, the existing bridge will flood at high tide occasionally in 2040 and daily in 2060, therefore, TEC anticipates that the bridge will need to be replaced and the profile raised significantly in the future. TEC understands there is some variability in the estimation of future sea level rise, which has a large effect on the required profile raise and impacts to approach roadways. If the proposed rehabilitation alternative is pursued, the existing bridge can remain in service for the rest of its anticipated service life, at which time the projected sea level rise may be re-evaluated to determine a more accurate profile raise required for a replacement bridge. This can be accomplished while still improving the traffic safety features and roadway alignments for an increased user safety with the option for a sidewalk at a significantly lower cost than the replacement alternative. See attached figures 1 & 2 for sketches of the additional sidewalk and the proposed highway improvements.

Ames Avenue Bridge over Hither Creek

TEC originally recommended that the replacement alternative is pursued for further design and investigation. This is because the existing bridge's service life is limited by the age and condition of the existing timber piles which are recommended to be replaced. While repairs may extend their service life by approximately 25-years, it is still costly, and the bridge may require additional repairs over this time. The bridge is also subject to damage from wave action during storm events whose frequency will only increase over time due to sea level rise.

However, after meeting with local residents, it was determined that the most prudent path forward may be a preservation alternative. Under this alternative, typical maintenance and upkeep would be performed, but no extensive rehabilitation to the bridge would take place. This alternative stems from the belief that the intersection at Madaket Road and Ames Avenue will be in jeopardy before the bridge. A full replacement structure would give a 75-year lifespan. However, due to the local geography and future climate change and sea level rise concerns, a 75-year lifespan may be excessive for this location and would be beyond the expected lifespan of the adjacent roadways and much of Smith's point, the area that the bridge services.

This preservation alternative would be pursued while also developing emergency engineered plans that could be ready for rapid implementation if a washout of the bridge were to occur.

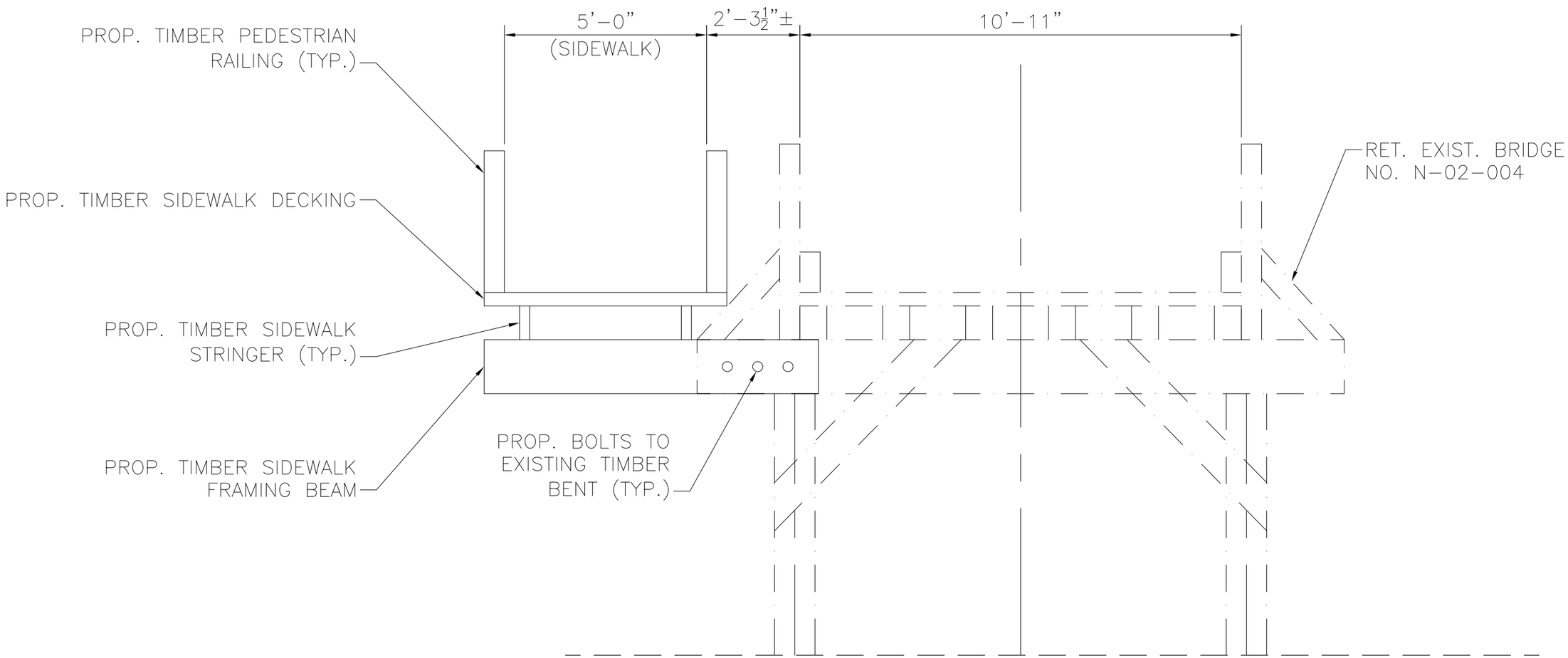

ADDITIONAL CANTILEVERED SIDEWALK

SCALE: $\frac{3}{8}$" = 1'-0"

Figure 1 - Additional Cantilevered Sidewalk
Massasoit Road Over Long Pond (N-02-004) - Rehabilitation
Nantucket, MA
Scale: As Noted

T:\T0863\CAD\Structural\Prelim\Massasoit_Road\T0863_Massoit_Road_PSR.dwg 9/14/2020 8:30:01 AM

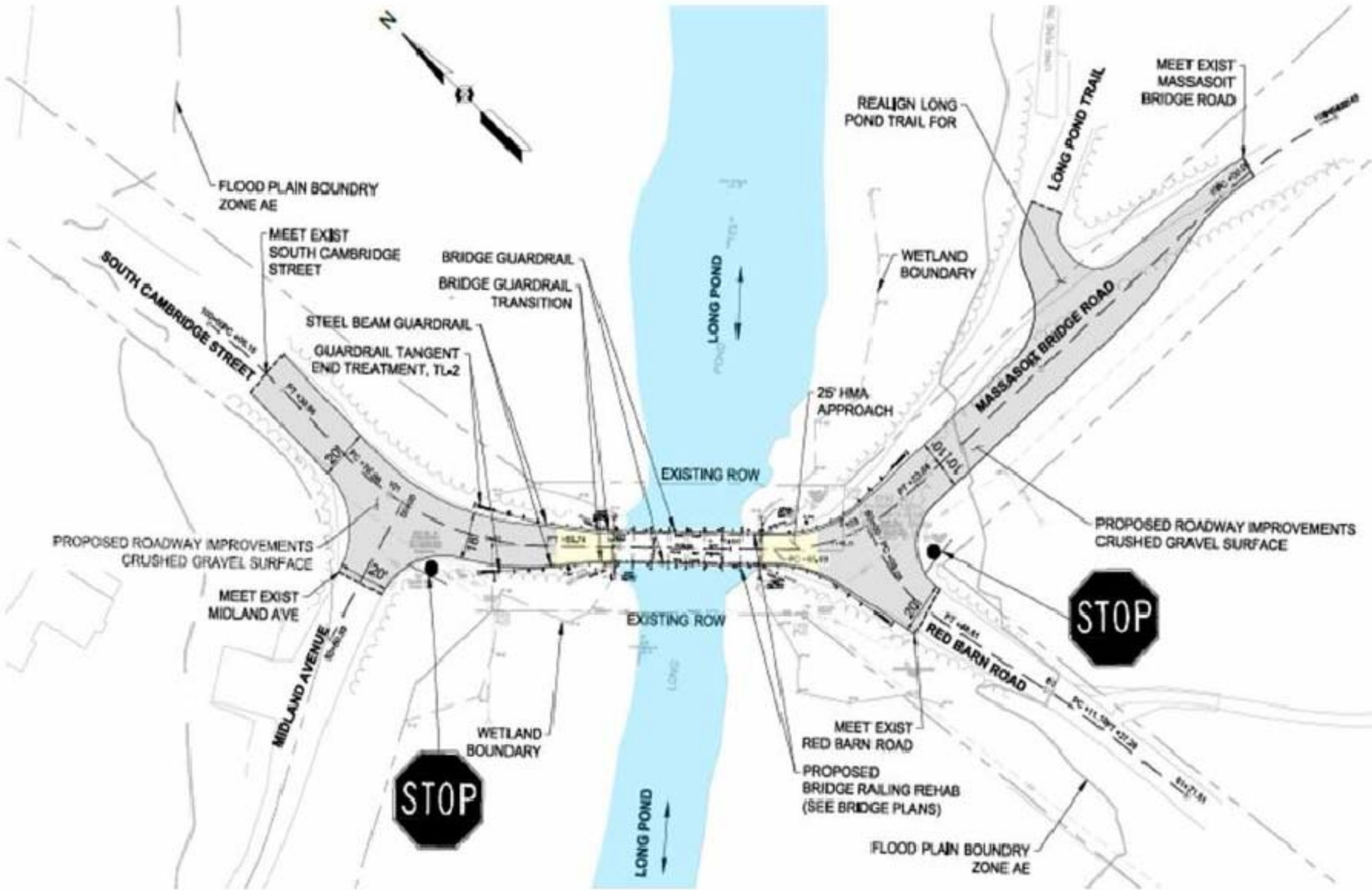

TEC
The Engineering Corp

Figure 2 - Proposed Highway Work
Massasoit Road Over Long Pond (N-02-004) - Rehabilitation
Nantucket, MA
Scale: As Noted

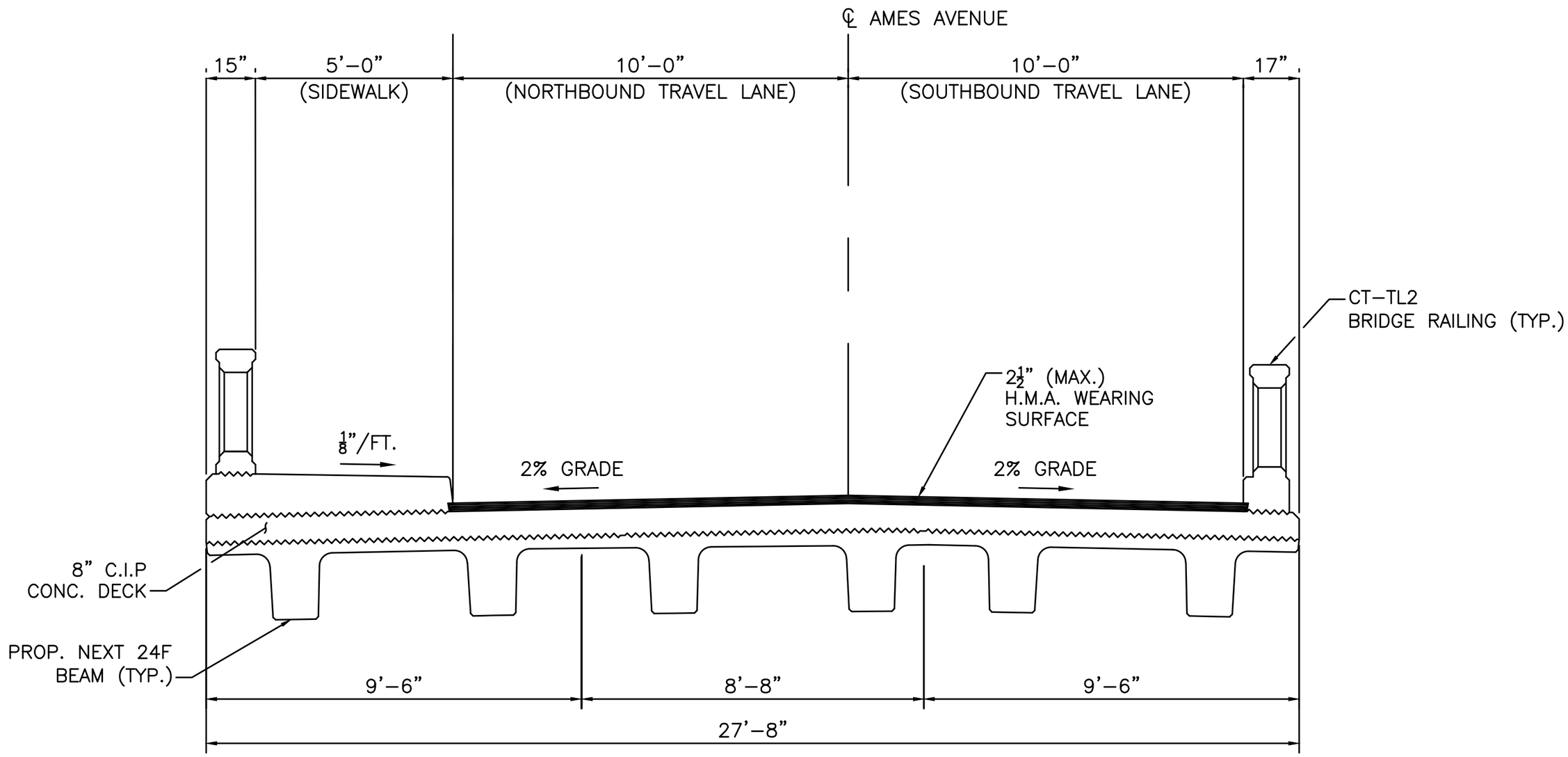

PROPOSED BRIDGE CROSS–SECTION

SCALE: ⅜" = 1'–0"

T:\T0863\CAD\Structural\Prelim\Ames Ave\T0863_Ames_Ave_BTSW.dwg 6/22/2020 10:26:45 AM

TEC
The Engineering Corp

Figure 3 - Proposed Bridge Cross-section
Ames Ave over Hither Creek (N-02-003) - Replacement
Nantucket, MA
Scale: As Noted

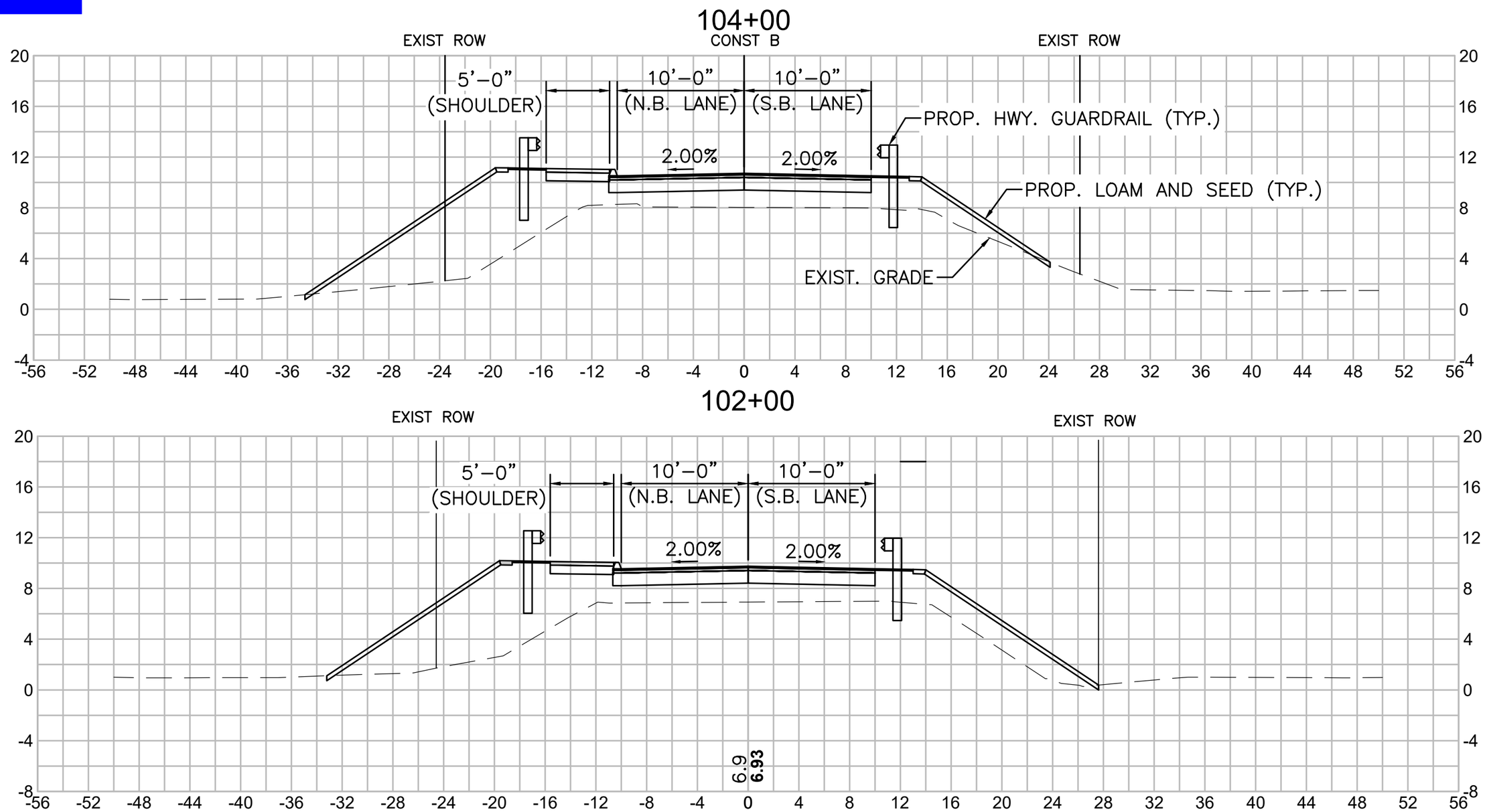

APPROACH ROADWAY CROSS–SECTION
(LOOKING SOUTH)
SCALE: 1" = 1'–0"

Figure 4 - Proposed Typical Approach Roadway Cross-section
Ames Ave over Hither Creek (N-02-003) - Replacement
Nantucket, MA
Scale: As Noted

T:\T0863\CAD\Structural\Prelim\Ames Ave\T0863_Ames_Ave_BTSW.dwg 6/22/2020 10:26:56 AM

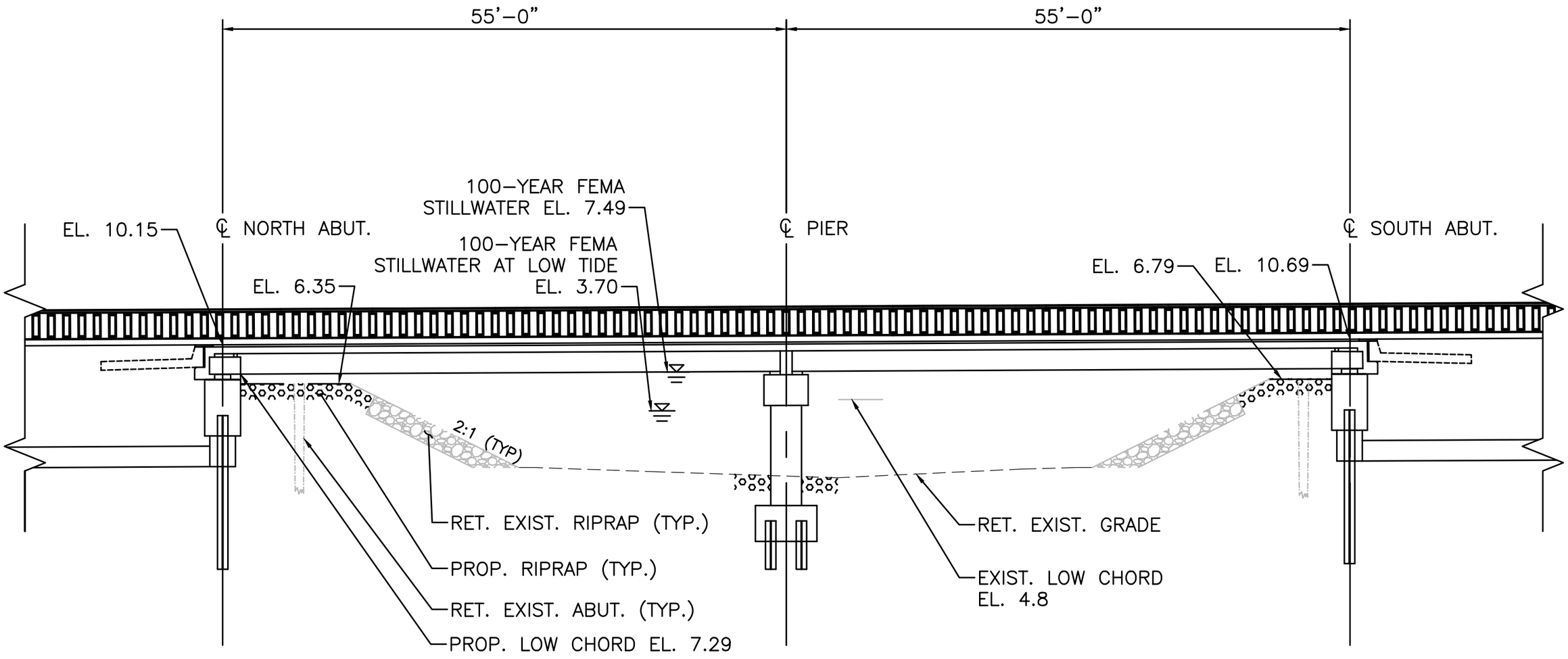

CLEARANCE DIAGRAM OF WATER CROSSED

SCALE: 1" = 10'

TEC
The Engineering Corp

Figure 5 - Proposed Clearance Diagram of Water Crossed
Ames Ave over Hither Creek (N-02-003) - Replacement
Nantucket, MA
Scale: As Noted

T:\T0863\CAD\Structural\Prelim\Ames Ave\T0863_Ames_Ave_BTSW.dwg 6/23/2020 10:30:47 PM